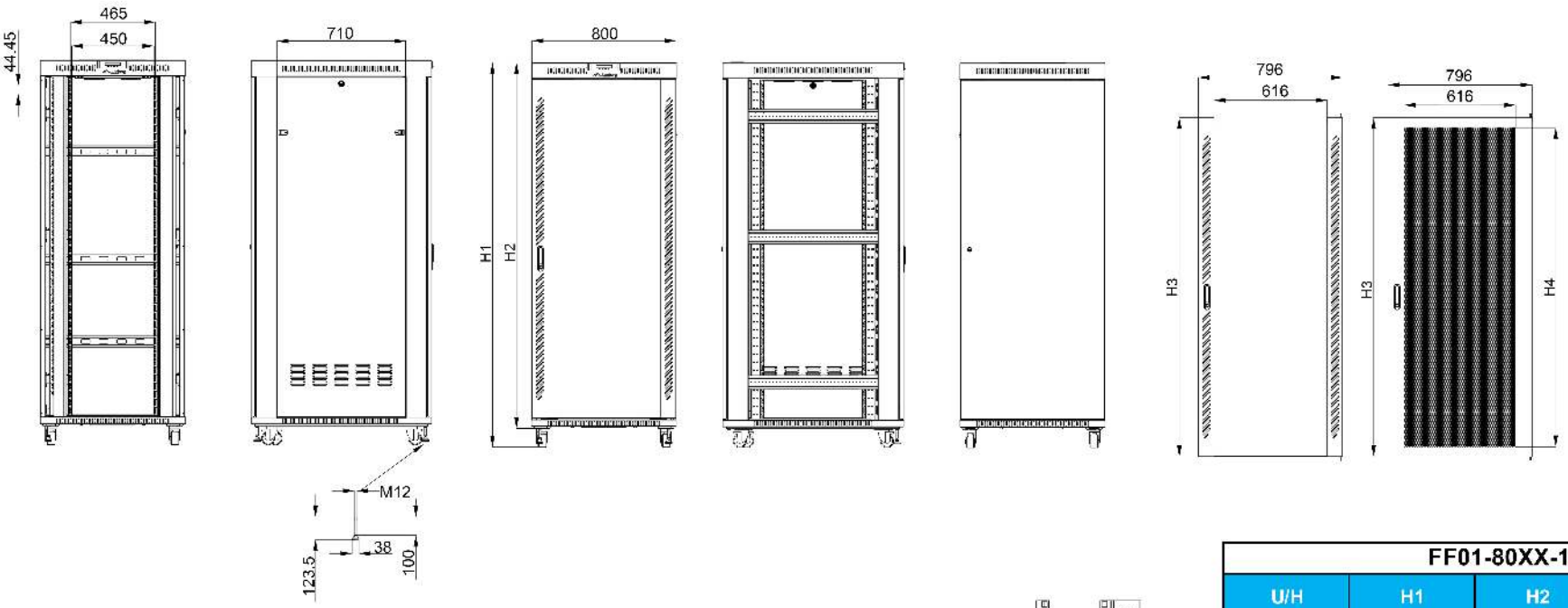

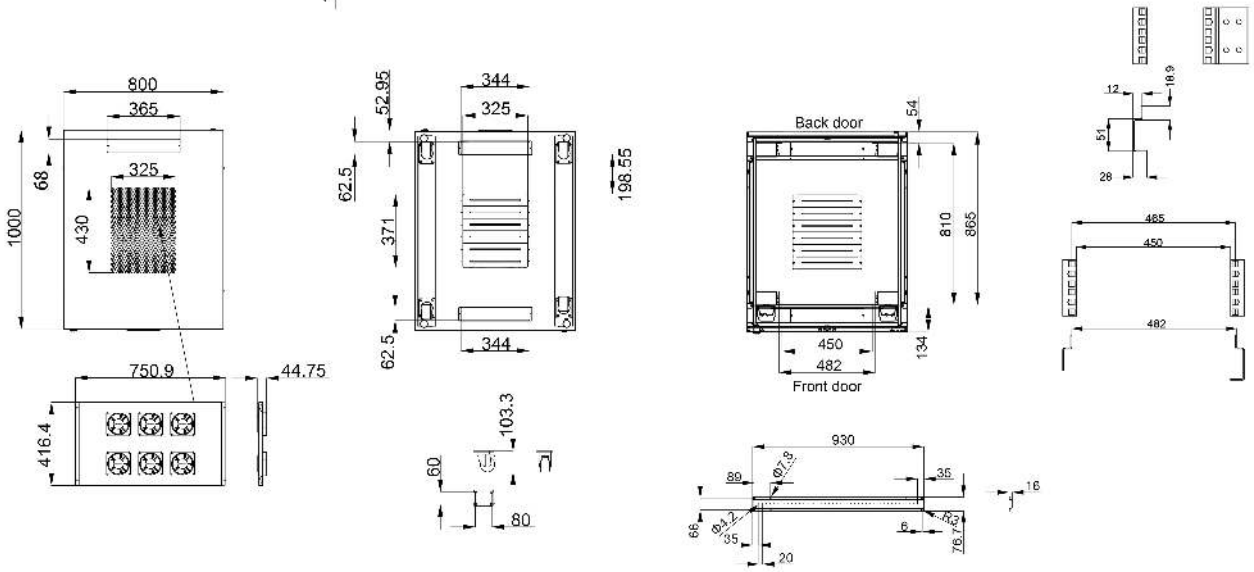

FF01-80XX-12/23SL				
U/H	H1	H2	H3	H4
15	923.3	820.0	671.9	561.9
18	1056.6	953.3	805.2	695.2
22	1234.4	1131.1	983.0	873.0
24	1323.3	1220.0	1071.9	961.9
27	1456.7	1353.4	1205.3	1095.3
32	1678.9	1575.6	1427.5	1317.5
37	1901.2	1797.9	1649.8	1539.8
42	2123.4	2020.1	1872.0	1762.0
47	2345.7	2242.4	2094.3	1984.3

*Note: H1= Height include castor
H2= Height between top and bottom
H3= Height of door
H4= Height of the mesh

Lanberg