DH-HAC-HFW2249T-I8-A

2MP Full-color Starlight HDCVI Bullet Camera

- Full-color starlight
- 120dB true WDR, 3DNR
- Max. 30fps@1080P
- HD/SD output switchable
- Audio in interface, built-in mic
- 3.6mm fixed lens
- IP67, DC12V±30%

System Overview

Experience 1080P full HD video and the simplicity of reusing existing coaxial infrastructure with HDCVI. The full-color starlight HDCVI camera with 120dB true WDR presents a high quality image with rich details even in low-light conditions. It offers various fixed lens models with a multi-language OSD and HD/SD switchable output. Its superior image performance and full-color feature makes the camera an ideal choice for applications in the exterior of houses or buildings with little external light sources nearby. It should be noted that full-color cameras need ambient lighting to continue to record full-color images.

Functions

Full-color Starlight

With the adoption of high performance sensor and large-sized aperture lens, the camera is able to provide a more coloful image even under lowlight environment. Full-color starlight cameras are prefect for applications of low-light conditions which is over 1 lux, such as parking lots, urban streets, schools, museums, etc.

*If the lighting condition is at total darkness, the video can not be used for monitoring.

Broadcast-quality Audio

Audio information is used as supplementary evidence in video surveillance applications. The HDCVI camera supports audio signal transmission over coaxial cable. In addition, it adopts unique audio processing and transmission technology that best restores source audio and eliminates noise, guaran-teeing the quality and effectiveness of collected audio information.

Large Aperture Lens

The camera adopts high-end F1.0 large aperture lens. With higher amount of absorbed light, the camera presents an impressive lowlight performance.

4 Signals over 1 Coaxial Cable

HDCVI technology supports 4 signals to be transmitted over 1 coaxial cable simultaneously, i.e. video, audio*, data and power. Dual-way data transmission allows the HDCVI camera to interact with the HCVR, such as sending control signal or triggering alarm. Moreover, HDCVI technology supports PoC for construction flexibility.

* Audio input is available for some models of HDCVI cameras.

Long Distance Transmission

HDCVI technology guarantees long-distance and real-time transmission without any loss. It supports up to 800m for 1080P Full HD video via coaxial cable, and up to 300m via UTP cable.*

*Actual results verified by real-scene testing in Dahua's test laboratory.

Simplicity

HDCVI technology inherits the born feature of simplicity from traditional analog surveillance system, making itself a best choice for investment protection. HDCVI system can seamlessly upgrade the traditional ana-log system without replacing existing coaxial cabling. The plug and play approach enables full HD video surveillance without the hassle of configuring a network.

Multiple-formats

The camera supports multiple video formats including HDCVI, CVBS, and other two common HD analog formats in the market. A DIP switch located on the cable allows you to quickly toggle formats, further simplifying installation and debugging. This feature makes the camera compatible with not only XVRs, but also most existing HD/SD DVRs.

Wide Dynamic Range

Embedded with industry leading wide dynamic range (WDR) technology, vivid pictures are achieved even in the most intense contrast lighting conditions. True WDR (120dB) optimizes both the bright and dark areas of a scene at the same time to provide usable video.

Advanced 3DNR

3DNR is noise reduction technology that detects and eliminates random noises by comparing two sequential frames. Dahua's advanced 3DNR tech-nology allows remarkable noise reduction with little impact to sharpness, especially under limited lighting condition. Besides, the advanced 3DNR effectively decreases the band width and saves the storage space.

Protection

The camera's outstanding reliability is unsurpassed due to its rugged design. The camera is protected against water and dust with IP67 ranking, making it suitable for indoor or outdoor environments.

Supporting ±30% input voltage tolerance, this camera suits even the most unstable power supply conditions. Its 4KV lightning rating provides pro-tection against the camera and its structure from the effects of lightning.

Technical Specification

Camera

Image Sensor	1/2.8" CMOS
Effective Pixels	1920(H)×1080(V), 2MP
Scanning System	Progressive
Electronic Shutter Speed	PAL: 1/4s~1/100,000s NTSC: 1/3s~1/100,000s
Minimum Illumination	0.001Lux/F1.0
S/N Ratio	More than 65dB
IR Distance	N/A
IR On/Off Control	N/A
IR LEDs	N/A

Lens

Lens Type	Fixed lens / Fixed iris
Mount Type	Board-in
Focal Length	3.6mm
Max Aperture	F1.0
Angle of View	H: 89.5°
Focus Control	N/A
Close Focus Distance	1600mm 63''

DORI Distance

Note: The DORI distance is a "general proximity" of distance which makes it easy to pinpoint the right camera for your needs. The DORI distance is calculated based on sensor specification and lab test result according to EN 62676-4 which defines the criteria for Detect, Observe, Recognize and Identify respectively.

	DORI Definition	Distance
Detect	25px/m (8px/ft)	3.6mm: 53m(174ft)
Observe	63px/m (19px/ft)	3.6mm:21m(69ft)
Recognize	125px/m (38px/ft)	3.6mm: 11m(36ft)
Identify	250px/m (76px/ft)	3.6mm: 5m(16ft)

Pan / Tilt / Rotation

Pan/Tilt/Rotation	Pan: 0° ~ 360° Tilt: 0° ~ 90° Rotation: 0° ~ 360°

Video

Resolution	1080P (1920×1080)
Frame Rate	25/30fps@1080P, 25/30/50/60fps@720P
Video Output	1-channel BNC high definition video output / CVBS video output (DIP switch)
Day/Night	Color
OSD Menu	Multi-language
BLC Mode	BLC / HLC / WDR
WDR	120dB
Gain Control	AGC
Noise Reduction	2D/3D
White Balance	Auto / Manual
Smart IR	N/A

Certifications

Certifications	CE (EN55032, EN55024, EN50130-4) FCC (CFR 47 FCC Part 15 subpartB, ANSI C63.4-2014) UL (UL60950-1+CAN/CSA C22.2 No.60950-1)

Interface

Audio Interface	1ch in & Built-in Mic

Eelectrical

Power Supply	12V DC ±30%
Power Consumption	Max. 2.4W (12V DC, IR on)

Environmental

Operating Conditions	-40°C ~ +60°C (-40°F ~ +140°F) / Less than 90% RH * Start up should be done at above-40°C (-40°F)
Storage Conditions	-40°C ~ +60°C (-40°F ~ +140°F) / Less than 90% RH
Ingress Protection & Vandal Resistance	IP67

Construction

Casing	Aluminium
Dimensions	244.1mm×90.4mm×90.4mm (9.61"×3.5"×23.5")
Net Weight	0.75kg (1.65lb)
Gross Weight	0.97kg (2.14lb)

Ordering Information

Type	Part Number	Description
2MP Camera	DH-HAC-HFW2249TP-I8-A 3.6mm	2MP Full-color Starlight HDCVI IR Bullet Camera, PAL
	DH-HAC-HFW2249TN-I8-A 3.6mm	2MP Full-color Starlight HDCVI IR Bullet Camera, NTSC
Accessories	PFA121	Junction box (For use alone or with PFA152-E pole mount)
	PFA152-E	Pole mount (For use with PFA121 junction box)
	PFA151	Corner mount braket (For use with PFA130-E junction box)
	PFM800-E	Passive HDCVI Balun
	PFM321	12V 1A Power Adapter
	PFM320	12V 2A Power Adapter
	PFM300	12V 2A Power Adapter

Accessories

Optional:

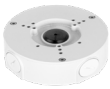

PFA130-E
Junction box

PFA152-E
Pole mount

PFA151
Corner mount braket

PFM321
12V 1A Power Adapter

PFM320
12V 2A Power Adapter

PFM800-E
Passive HDCVI Balun

PFM300
12V 2A Power Adapter

Junction Mount	Pole Mount
PFA130-E	PFA130-E + PFA152-E

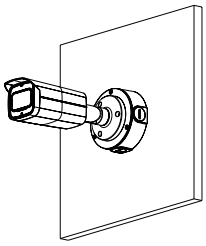

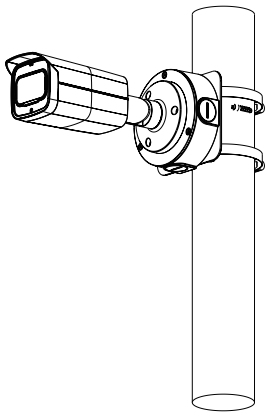

Corner Mount
PFA130-E + PFA151

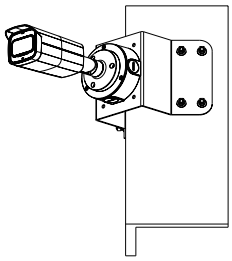

Dimensions (mm/inch)

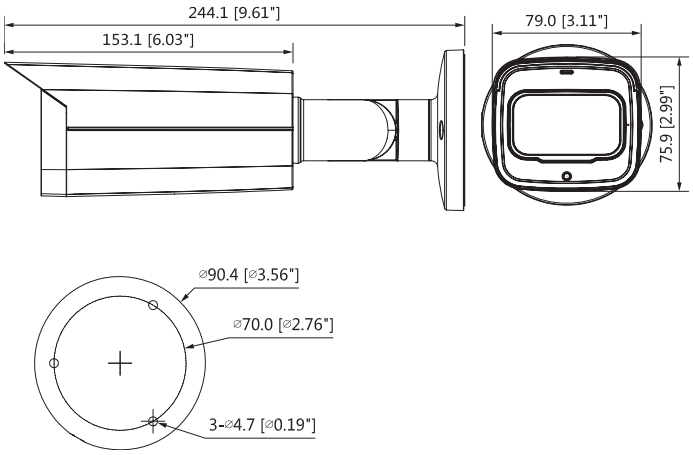

© 2018 Dahua. All rights reserved. Design and specifications are subject to change without notice.