DH-IPC-HFW2649T-ZAS-IL

6MP Smart Dual Light Vari-focal Bullet WizSense Network Camera

Launched by Dahua Technology, WizSense is a series of AI products and solutions that adopt independent AI chip and deep learning algorithm. It focuses on human and vehicle with high accuracy, enabling users to fast act on defined targets. Based on Dahua's advanced technologies, WizSense provides intelligent, simple and inclusive products and solutions.

Series Overview

With advanced deep learning algorithm, Dahua WizSense 2 Series network camera supports intelligent functions, such as perimeter protection and smart motion detection. With starlight technology, this series camera provides a better image effect in the condition of low illuminance.

Functions

Smart Dual Light
Dahua Smart Dual Light technology adopts smart algorithm to detect targets. Usually, the IR illuminator is on at night; when the target appears in the monitoring area, the white light is on, and the camera records the full-color video and information of key events. That is, the camera links snapshot and video with full-color image. When the target is out of the monitoring area, the white light is off and the IR illuminator is on, which reduces light pollution efficiently.

SMD Plus
With intelligent algorithm, Dahua Smart Motion Detection technology can categorize the targets that trigger motion detection and filter the motion detection alarm triggered by non-concerned targets to realize effective and accurate alarm.

Perimeter Protection
With deep learning algorithm, Dahua Perimeter Protection technology can recognize human and vehicle accurately. In restricted area (such as pedestrian area and vehicle area), the false alarms of intelligent detection based on target type (such as tripwire, intrusion, fast moving, parking detection, loitering detection and gathering detection) are largely reduced.

- 6-MP 1/2.7" CMOS image sensor, low luminance, and high definition image.
- Outputs max. 6MP (3288 × 1850) @20 fps, and supports 2688×1520 (2688 × 1520)@25/30 fps
- H.265 codec, high compression rate, ultra-low bit rate.
- Built-in multi-core light, the max. IR distance is 60 m and the max. warm light distance is 60 m.
- ROI, SMART H.264+/H.265+, flexible coding, applicable to various bandwidth and storage environments.
- Rotation mode, WDR, 3D NR, HLC, BLC, digital watermarking, applicable to various monitoring scenes.
- Intelligent monitoring: Intrusion, tripwire (the two function support the classification and accurate detection of vehicle and human).
- Abnormality detection: Motion detection, video tampering, audio detection, no SD card, SD card full, SD card error, network disconnection, IP conflict, illegal access, and voltage detection.
- Alarm: 1 in, 1 out; audio: 1 in, 1 out; supports max. 256 G Micro SD card; built in Mic.
- 12 VDC/PoE power supply.
- IP67, IK10 (optional) protection.
- SMD Plus

Smart H.265+ & Smart H.264+
With advanced scene-adaptive rate control algorithm, Dahua smart encoding technology realizes the higher encoding efficiency than H.265 and H.264, provides high-quality video, and reduces the cost of storage and transmission.

Full-color
With high-performance sensor and large aperture lens, Dahua Full-color technology can display clear colorful image in the environment of ultra-low illuminance. With this photosensitivity technology, the camera can capture more available light, and display more colorful image details.

Cyber Security
Dahua network cameras employ a series of security technologies, including security authentication and authorization, access control protocols, trusted protection, encrypted transmission and encrypted storage. These technologies improve the camera's defense against external cyber threats and prevent malicious programs from compromising the device.

Protection (IP67, Wide Voltage)
IP67: The camera passes a series of strict test on dust and soak. It has dust-proof function, and the enclosure can work normally after soaking in 1 m deep water for 30 minutes. Wide voltage: The camera allows ±30% (for some power supplies) input voltage tolerance (wide voltage range), and it is widely applied to outdoor environment with instable voltage.

Technical Specification

Camera

Image Sensor	1/2.7" CMOS
Max. Resolution	3288 (H) × 1850 (V)
ROM	128 MB
RAM	256 MB
Scanning System	Progressive
Electronic Shutter Speed	Auto/Manual 1/3 s–1/100,000 s
Min. Illumination	0.007 lux@F1.5 (Color, 30 IRE) 0.0007 lux@F1.5 (B/W, 30 IRE) 0 lux (Illuminator on)
S/N Ratio	>56 dB
Illumination Distance	Up to 60 m (196.85 ft) (IR) Up to 60 m (196.85 ft)) (Warm light)
Illuminator On/Off Control	Auto;Manual
Illuminator Number	4 (Multi-core (IR + warm) light)
Angle Adjustment	Pan: 0°–360°; Tilt: 0°–90°; Rotation: 0°–360°

Lens

Lens Type	Motorized vari-focal
Lens Mount	ϕ14
Focal Length	2.7 mm–13.5 mm
Max. Aperture	F1.5
Field of View	H: 114°–32°; V: 58°–17°; D: 138°–36°
Iris Control	Fixed
Close Focus Distance	0.8 m (2.62 ft)

DORI Distance	Lens	Detect	Observe	Recognize	Identify
	W	64.0 m (209.97 ft)	25.6 m (83.99 ft)	12.8 m (41.99 ft)	6.4 m (20.99 ft)
	T	210.0 m (688.98 ft)	84.0 m (275.59 ft)	42.0 m (137.80 ft)	21.0 m (68.90 ft)

*DORI (Detect, Observe, Recognize, Identify) is a standard system (EN-62676-4) for defining the ability of a person viewing the video to distinguish persons or objects within a covered area. The numbers in this table do not reflect intelligent function distances. For intelligent function distances, refer to installation and commissioning manual/project design tool.

Intelligence

IVS (Perimeter Protection)	Intrusion, tripwire (the two functions support the classification and accurate detection of vehicle and human)
SMD	SMD Plus
Smart Search	Work together with Smart NVR to perform refine intelligent search, event extraction and merging to event videos

Video

Video Compression	H.265; H.264; H.264H; H.264B; MJPEG (Only supported by sub stream)
Smart Codec	Smart H.265+; Smart H.264+
Video Frame Rate	Main stream: 3288 × 1850@(1–20 fps)/2688 × 1520@(1–25/30 fps) sub stream: 704 × 576@(1–25 fps)/704 × 480@(1–30 fps) *The values above are the max. frame rates of each stream; for multiple streams, the values will be subjected to the total encoding capacity.
Stream Capability	2 streams
Resolution	6M (3288 × 1850/3200 × 1800); 5M (2880 × 1620); 4M (2688 × 1520); 3M (2304 × 1296); 1080p (1920 × 1080); 1.3M (1280 × 960); 720p (1280 × 720); D1 (704 × 576/704 × 480); VGA (640 × 480); CIF (352 × 288/352 × 240)
Bit Rate Control	VBR;CBR
Video Bit Rate	H.264: 32 kbps–8192 kbps; H.265: 12 kbps–8192 kbps
Day/Night	Auto(ICR)/Color/B/W
BLC	Yes
HLC	Yes
WDR	120 dB
White Balance	Auto; natural; street lamp; outdoor; manual; regional custom
Gain Control	Auto/Manual
Noise Reduction	3D NR
Motion Detection	OFF/ON (4 areas, rectangular)
Region of Interest (RoI)	Yes (4 areas)
Smart Illumination	Yes
Smart Dual Light	Yes
Image Rotation	0°/90°/180°/270° (Support 90°/270° with 2688 × 1520 resolution and lower)
Mirror	Yes
Privacy Masking	4 areas

Audio

Built-in MIC	Yes, built-in Mic
Audio Compression	G.711a; G.711Mu; G.726; PCM;

Alarm

Alarm Event	No SD card; SD card full; SD card error; network disconnection; IP conflict; illegal access; motion detection; video tampering; tripwire; intrusion; audio detection; voltage detection; defocus detection; SMD; security exception

Network

Network Port	RJ-45 (10/100 Base-T)
Network Protocol	IPv4; IPv6; HTTP; TCP; UDP; ARP; RTP; RTSP; RTCP; RTMP; SMTP; FTP; SFTP; DHCP; DNS; DDNS; QoS; UPnP; NTP; Multicast; ICMP; IGMP; NFS; PPPoE; Boujour; P2P
Interoperability	ONVIF (Profile S & Profile G & Profile T); CGI

User/Host	20 (Total bandwidth: 48 M)
Storage	FTP; SFTP; Micro SD card (support max. 256 GB); NAS
Browser	IE; Chrome; Firefox
Management Software	Smart PSS Lite; DSS; DMSS; DoLynk Care
Mobile Client	iOS;Android
Cyber Security	Video encryption;Firmware encryption;Configuration encryption;Digest;WSSE;Account lockout;Security logs;IP/MAC filtering;Generation and importing of X.509 certification;syslog;HTTPS;802.1x;Trusted boot;Trusted execution;Trusted upgrade;Session security;Security warning

Certification

Certifications	CE-LVD: EN62368-1; CE-EMC: Electromagnetic Compatibility Directive 2014/30/EU

Port

Audio Input	1 channel (RCA port)
Audio Output	1 channel (RCA port)
Alarm Input	1 channel in: wet contact, 5 mA 3–5 VDC
Alarm Output	1 channel out: wet contact, 300 mA 12 VDC

Power

Power Supply	12 VDC/PoE
Power Consumption	Basic: 2.6 W (12 VDC), 3.1 W (PoE); Max.: 10.2 W (12 VDC), 12.7 W (PoE) (H.265 + intelligence on+ WDR + warm light intensity)

Environment

Operating Temperature	–30 °C to +60 °C (–22 °F to +140 °F)
Operating Humidity	≤95% (RH), non-condensing
Storage Temperature	–30 °C to +60 °C (–22 °F to +140 °F)
Storage Humidity	≤95% (RH), non-condensing
Protection	IP67; IK10 (optional)

Structure

Casing Material	Metal
Product Dimensions	238.5 mm × 90.7 mm × 90.7 mm (9.39" × 3.57" × 3.57") (L × W × H)
Net Weight	0.76 kg (1.68 lb)
Gross Weight	0.95 kg (2.09 lb)

Ordering Information

Type	Model	Description
IP CAMERA	DH-IPC-HFW2649T-ZAS-IL	6MP Smart Dual Light Vari-focal Bullet WizSense Network Camera
Accessories (Optional)	DH-PFA130-E	Water-proof Junction Box
	DH-PFA151	Corner Mount Bracket
	G3416GW	G3/4" Water Joint
	DH-PFA152-E	Pole Mount Bracket
	DH-PFA135	Junction Box
	DH-PFM321-EN	DC12V1A power adapter
	DH-PFM321D-EN	DC12V 1A power adapter
	DH-PFM320D-EN	DC12V2A power adapter
	PFM900-E	Integrated Mount Tester
	DHI-TF-P100/256GB	MicroSD Card

Accessories

Optional:

DH-PFA130-E
Water-proof Junction Box

DH-PFA151
Corner Mount Bracket

G3416GW
G3/4" Water Joint

DH-PFA152-E
Pole Mount Bracket

DH-PFA135
Junction Box

DH-PFM321-EN
DC12V1A power adapter

DH-PFM321D-EN
DC12V 1A power adapter

DH-PFM320D-EN
DC12V2A power adapter

PFM900-E
Integrated Mount Tester

DHI-TF-P100/256GB
MicroSD Card

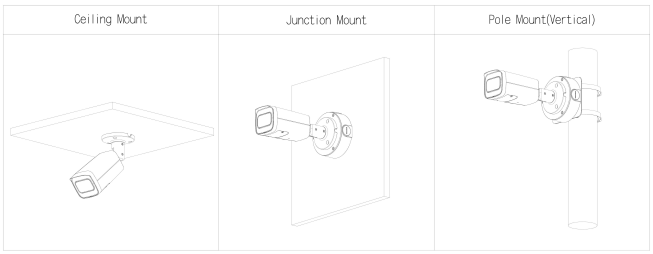

Dimensions (mm[inch])

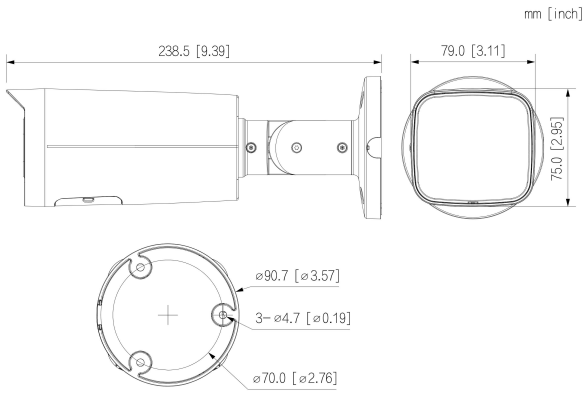

Rev 002.000 ©2024 Dahua. All rights reserved. Design and specifications are subject to change without notice.
Pictures in the document are for reference only, and the actual product shall prevail.