D-Volt Air & D-Volt Pro

THE CHARGE OF CHANGE

Quick Start Guide

V1.0.0

Fast & Powerful

Innovation & Precision

Sustainable Promise & Future

Foreword

General

This manual introduces the installation, functions and operations of the charging station (hereinafter referred to as the "device"). The installation and commissioning instructions are intended for qualified installers who can assess the work and identify potential danger. Read carefully before using the device, and keep the manual safe for future reference.

Safety Instructions

The following signal words might appear in the manual.

Signal Words	Meaning
DANGER	Indicates a high potential hazard which, if not avoided, will result in death or serious injury.
WARNING	Indicates a medium or low potential hazard which, if not avoided, could result in slight or moderate injury.
CAUTION	Indicates a potential risk which, if not avoided, could result in property damage, data loss, reductions in performance, or unpredictable results.
TIPS	Provides methods to help you solve a problem or save time.
NOTE	Provides additional information as a supplement to the text.

Revision History

Version	Revision Content	Release Time
V1.0.0	First release.	July 2025

Privacy Protection Notice

As the device user or data controller, you might collect the personal data of others such as their face, audio, fingerprints, and license plate number. You need to be in compliance with your local privacy protection laws and regulations to protect the legitimate rights and interests of other people by implementing measures which include but are not limited to: Providing clear and visible identification to inform people of the existence of the surveillance area and provide required contact information.

About the Manual

- The manual is for reference only. Slight differences might be found between the manual and the product.
- We are not liable for losses incurred due to operating the product in ways that are not in compliance with the manual.

- The manual will be updated according to the latest laws and regulations of related jurisdictions. For detailed information, see the paper user manual, use our CD-ROM, scan the QR code or visit our official website. The manual is for reference only. Slight differences might be found between the electronic version and the paper version.
- All designs and software are subject to change without prior written notice. Product updates might result in some differences appearing between the actual product and the manual. Please contact customer service for the latest program and supplementary documentation.
- There might be errors in the print or deviations in the description of the functions, operations and technical data. If there is any doubt or dispute, we reserve the right of final explanation.
- Upgrade the reader software or try other mainstream reader software if the manual (in PDF format) cannot be opened.
- All trademarks, registered trademarks and company names in the manual are properties of their respective owners.
- Please visit our website, contact the supplier or customer service if any problems occur while using the device.
- If there is any uncertainty or controversy, we reserve the right of final explanation.

Important Safeguards and Warnings

This section introduces content covering the proper handling of the device, hazard prevention, and prevention of property damage. Read carefully before using the device, and comply with the guidelines when using it.

Transportation Requirements

When you transport or move the device, please note the following safeguards to ensure product safety.

- During transportation, avoid exposing the device to direct sunlight and rain, and do not let it fall.
- Do not place heavy stress on the device, violently vibrate or immerse it in liquid during transportation.
- Protect the charging connector and charging cables from being squeezed during transportation.

Storage Requirements

DANGER

Do not expose the device to fire sources, and do not store it together with corrosive, flammable or explosive materials.

- Do not place the device in a place exposed to sunlight or near heat sources.
- Pack the device with packaging provided by its manufacturer or packaging of the same quality before transporting it.
- If the device needs to be stored away for a short or long period, place it indoors in a dry and well ventilated location. Ensure the location does not expose the Device to high temperatures and humidity, heavy dust and metal powder. Additionally, the ambient temperature of the location must be between –30 °C and +50 °C (–22 °F and +122 °F), and the relative humidity must be between 5% and 95%.

Installation Requirements

WARNING

- The installer of the device must have required certification or qualified training for performing installations and maintenance of device. They must also have knowledge and skills in the following areas:
  - Basic knowledge and skills in installing the device and components.
  - Basic knowledge and skills in low-voltage wiring and in connecting low-voltage electronic circuits.
  - The ability to read and understand the manual.
- Exercise all necessary precautions during installation to ensure your safety.

- Installation and wiring must be carried out by professionals to avoid electric shocks.
- The power must be cut off before wiring to avoid electric shocks.
- Strictly comply with the local electrical safety code and standards, and check whether the power supply is correct before operating the device.
- Reliably ground the grounding terminal of the device to improve safety.
- Do not leave bolts, washers, or other metals inside the device to avoid explosions and fire.
- The exposed parts of the cable terminal must be wrapped with insulation tape to avoid fire and property damage.
- The pole of the device must be installed on non-combustible materials, such as concrete, to avoid fire breaking out.
- Do not install the device in areas containing explosive gases to avoid explosions.

- When installing the device, make sure that the power plug and appliance coupler can be easily reached to cut off power.
- The front cover must be properly closed to avoid damage to the device.
- The main loopback terminal of the device must be firmly connected to the wiring interface to avoid property loss.
- Do not install the device in an environment that might expose it to vibrations, shocks and electromagnetic interference, to avoid it sustaining damage.
- Do not drop or splash liquid onto the device, and make sure that there is no object filled with liquid on the device to prevent liquid from flowing into it.
- Do not place the device in a place exposed to sunlight or near heat sources.
- To ensure the long-term stability of the device, avoid installing it in areas exposed to harsh weather conditions. Expansion due to heat or contraction due to cold can impact the installation process, subsequently affecting the device's performance over time.
- Install the device in a well-ventilated place, and do not block its ventilation. Also, install it vertically with ample space for proper airflow.
- Avoid installing the device in a location that has conductive dust, hazardous gases or steam.
- The installation foundation should be higher than the ground, and drainage ditches should be set around the device to protect it from sustaining damage.

Operating Requirements

WARNING

- An electric vehicle can only be charged when it is stationary with its engine off.
- Minors and persons with limited ability are strictly prohibited from approaching the device to avoid injury.
- Force charging is strictly prohibited when the electric vehicle or the device fails.
- If the device produces smoke, fire, abnormal noise, or water leaks into it, immediately move away from the device, and contact your local dealer or the service center.
- If the charging adapter or charging cable becomes defective, cracked, worn, broken, or the charging cable is exposed, it is forbidden to use the device. If you find any of the above problems, please contact your local dealer or the service center.
- Electric vehicles are not allowed to be charged during rainy or stormy conditions.
- To reduce the risk of fire and electric shock, do not expose the device to rain and damp environments.

Do not place the device in a humid, dusty, extremely hot or cold site that has strong electromagnetic radiation or unstable illumination.

Maintenance Requirements

DANGER

- All maintenance personnel of the device must have required certification or qualified training for maintaining the device. They must also have knowledge and skills in the following areas:
  - Basic knowledge and skills in installing the device and components.
  - Basic knowledge and skills in low-voltage wiring and in connecting low-voltage electronic circuits.
  - The ability to read and understand the manual.
- Personnel must wear protective shoes at all times during maintenance.
- The replacement of accessories must be performed by professionals. It is strictly prohibited to leave wires or metal in the controller as it could lead to explosion or fire.

WARNING

- If the device behaves abnormally, contact your local dealer or the service center. Do not dismantle or modify the device without a qualified professional present. We are not responsible for problems caused by unauthorized modifications and repairs.
- After the main PCBA is replaced, configure the parameters before you perform operations to avoid property damage.
- We recommend you conduct routine safety checks on the device at least once a week.
- To ensure the long-term performance of the device, it is important to periodically perform maintenance based on the installation environment. We recommend conducting monthly checks to ensure optimal functioning.
  - The device should be maintained by professionals.
  - Make sure that the device is properly grounded.
  - Check whether there are potential safety risks around the pole of the device. Ensure the device is not in an extremely hot, corrosive environment that has flammable and explosive materials.
  - Make sure that the connection points of the input terminals are securely and properly connected, and check for any abnormalities.
  - Make sure none of the connection points are loose.
- Keep the connector clean and dry. If there is dirt, wipe it away with a clean and dry cloth after powering off the device.

Table of Contents

Foreword I
Important Safeguards and Warnings III
1 Product Introduction 1
1.1 Product Overview 1
1.2 Features 2
2 Installation 4
2.1 Installation Preparation 4
2.1.1 Structural Attachments 4
2.1.2 Tools Required 4
2.1.3 Pre-Installation Checklist 5
2.1.4 Space Required for Placing and Maintenance 6
2.1.5 Installation Notice 7
2.2 Installation Procedure 7
2.2.1 Wall Mount Installation 8
2.2.2 Column Installation 11
2.3 Connecting the Cable 14
2.3.1 Connecting the Network Cable 15
2.3.2 Connecting the Power Cable 17
2.4 Completing the Installation 18
3 Operation Instructions 20
3.1 Initializing by App 20
3.2 Resetting the Password 21
3.3 Adding Chargers and Connecting to the Cloud Service 22
3.4 Charging Points Management 25
3.5 (Optional) DLB Installation Instructions 28
3.5.1 Preparations 28
3.5.2 Installation Diagram 29
3.5.3 Installation 30
4 Troubleshooting 33
4.1 LED Indicator 33
4.2 Error Code 33
Appendix 1 Glossary 35
Appendix 2 EU Declaration of Conformity 36
Appendix 3 Security Commitment and Recommendation 37

1 Product Introduction

1.1 Product Overview

The products include 2 series, D-Volt Air and D-Volt Pro. The D-Volt Pro has an LCD screen, but the D-Volt Air does not. The products are available in socket version and cable version, and some devices also support 4G function.

Figure 1-1 D-Volt Air

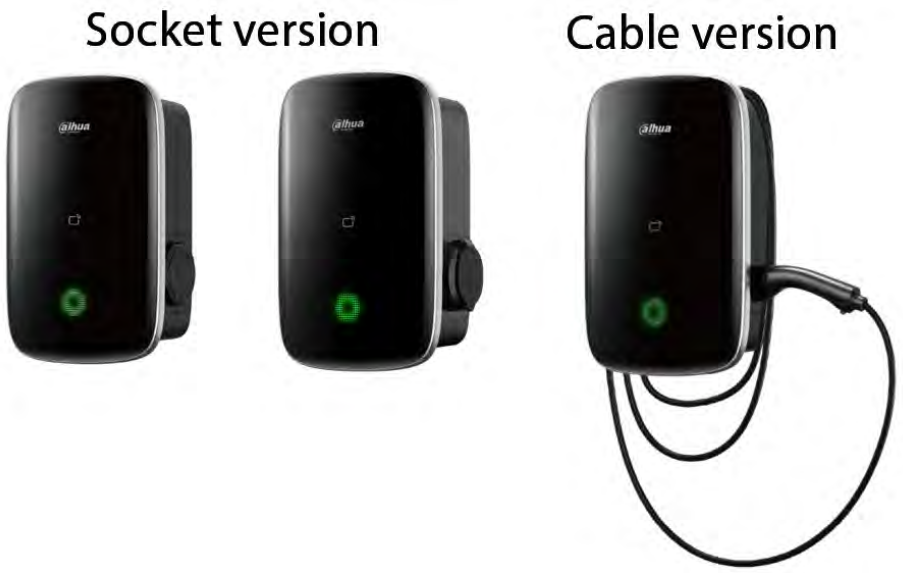

Figure 1-2 D-Volt Pro

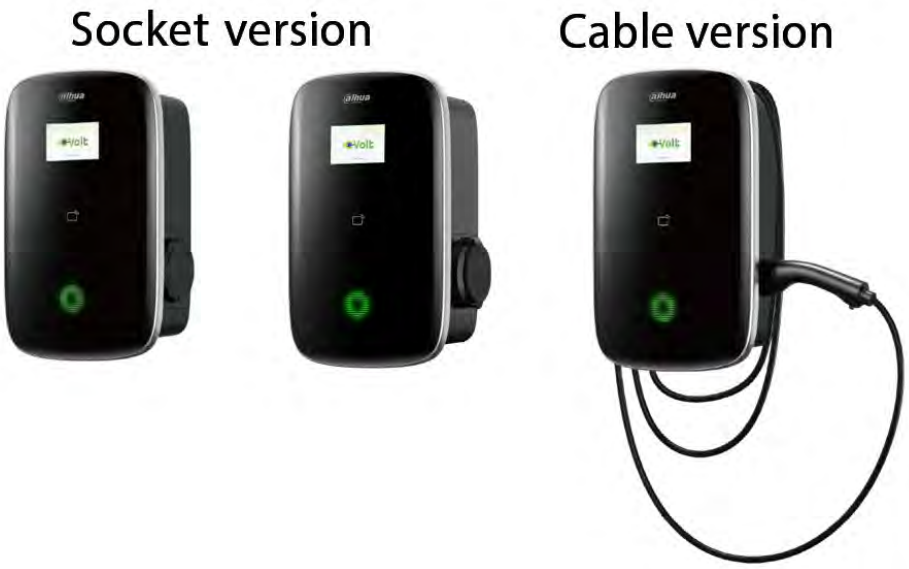

Table 1-1 Description of function

Function	Description
Card reader	After authorization, charging can be started or stopped by swiping the card at the designated area.

Function	Description
LCD screen	Show the charging information.
Socket version	Only socket version devices come with electronic lock.
Cable version	The connector of the cable version supports plug or unplug feedback.
4G	Insert the SIM card to establish remote connection between the device and the cloud platform, enabling remote monitoring, data transmission, and operational control of the device.

Figure 1-3 AC charging interface

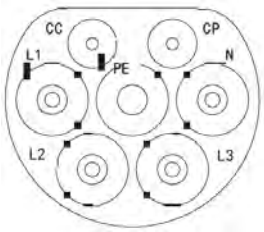

Table 1-2 Description of interface

Sign	Description
L1	AC output (single-phase).
L2	AC output (three-phase).
L3	
N	Neutral wire.
PE	Grounding protection.
CC	Charging connection confirmation.
CP	Control guidance.

1.2 Features

- Supports multiple network connections: Wi-Fi, Bluetooth, Ethernet and 4G.
- Offline configuration: Supports offline configuration using app through Bluetooth.
- Multiple start methods: Free vending (plug & play), RFID control and app control.
- Easy installation: The installation mode of first installing the charger and then connecting the wires enables quick installation by a single person.
- Leakage protection: It provides 30 mA Type A and 6 mA DC residual current protection (RCD), with PEN conductor protection functionality.
- Convenient maintenance: Supports Bluetooth, USB and OTA for upgrade, maintenance, detection and diagnosis.
- System expansion:
  - The current transformer interface supports dynamic load balancing for home applications.
  - The system enables remote power control by the DSO.
- Working temperature: –30 °C to +50 °C or –22 °F to +122 °F without derating.
- High grade protection: IP55 protection class for socket version, IP66 protection class for cable version, and IK10 anti-vandalism class.

- Protection capabilities: Comes with protection against overvoltage, undervoltage, overcurrent, short circuits, lightning surges, electric surges, leakage, overtemperature, metering failure, CP disconnection, and vehicle PE disconnection. It can also detect relay sticking and LN reverse connection, and offers grounding protection, PEN protection, and data security. The device is also dustproof and waterproof so that you can feel secure and comfortable while using it.
- Supports OCPP 1.6J.

2 Installation

2.1 Installation Preparation

2.1.1 Structural Attachments

Figure 2-1 Structural attachments

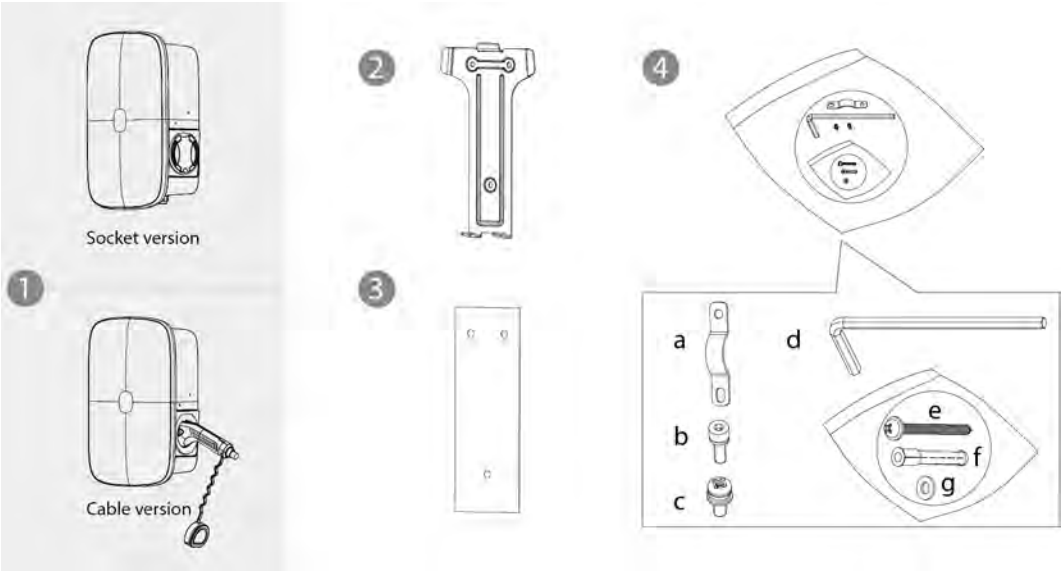

Table 2-1 Structural attachments

No.	Structural Attachments
1	Body (socket version or cable version).
2	Back plate.
3	Positioning sticker.
4	Accessory package, including the following attachments. ● a: Input power line terminal plate. ● b: M4 x 12 hexagonal cylindrical screw. ● c: M3 x 8 cross slot machine thread screw. ● d: Hexagonal wrench. ● e: ST6.3 x 70 self-tapping screw. ● f: Expansion tube. ● g: Flat washer.

2.1.2 Tools Required

The commonly used tools and instruments during device installation and maintenance are listed in the table below.

Insulation and anti-static treatment should be checked before using the tools.

Table 2-2 Tools

Auxiliary Device	Quantity	Application
Needle-nose pliers	1 piece	Auxiliary fixtures for device pin forming, bare wire winding on pins, welding and assembly of dense component surfaces.
Side-cutting pliers	1 piece	Cut excess wires, cut welding surface pins, and cut nylon cable ties.
Tweezers	1 piece	Auxiliary welding clamping tools, cleaning clamping tools, small component intake, and fine wire winding.
Flat-head screwdriver	1 set	Install and remove slotted screws, unpacking tools.
Phillips screwdriver	1 set	Install and remove cross recessed screws.
Adjustable wrench (double-ended, monkey wrench)	1 set	Move hex and four-legged bolts and nuts.
Electrician's knife	1 piece	Cable stripping, and more.
Electrician's rubber mallet	1 piece	Cable shaping and equipment position correction.
Step ladder	1 piece	Climbing.
Electric drill	1 piece	Open hole.
Multimeter (accuracy: millivolt level)	2–3 sets	Measure AC voltage, current, and resistance.
Wire stripper	1 roll	Used to bundle cables to ensure that they are secure and aesthetically pleasing.
Insulation tape	1 roll	Used for bare wire wrapping.
Earth resistance tester	1 set	Measure ground resistance.

Common auxiliary materials on site also include spirit level, insulating tape, self-adhesive label paper, soldering tin, nylon cable ties, and more.

2.1.3 Pre-Installation Checklist

Before starting the installation of the charging station, check the following:

- The installation will be in accordance with IEC 60364 and any applicable local regulations.
- All necessary permits have been obtained from the local authority that has jurisdiction.
- The existing electrical load has been calculated to find the maximum operating current for the charging station installation.

- The correct specification of power supply cable has been routed to the installation area, and there is sufficient cable length to strip and connect the wires.
- The power supply cable will remain within its bending tolerance during and after installation.
- The plugs, screws, and drill bits used for installing the charging station are suitable for the wall structure.

2.1.4 Space Required for Placing and Maintenance

Figure 2-2 Space requirements

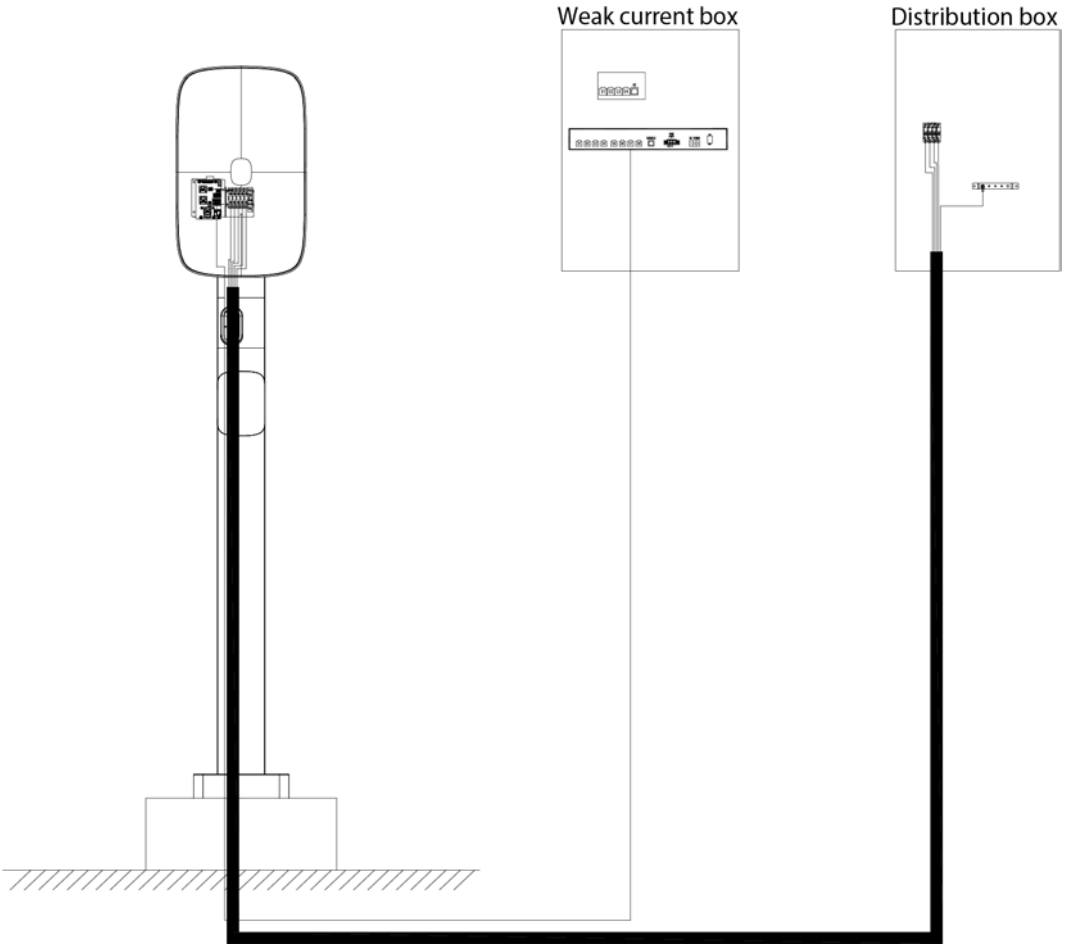

- The involved devices: Weak current box, optical modem, switch, distribution box, and leakage protector.
- For the wall-mounted installation location, we recommend that the bottom of the device should be no less than 120 cm–150 cm from the ground, and the vertical inclination for installation should not exceed 5%.
- Column installation: We recommend that the cable should be 1.5 m–1.6 m longer than the cement pedestal.
- We recommend that the height of the cement pedestal should not be less than 200 mm.
- Ensure that the wall where the device will be mounted has a flat and sturdy structure capable of supporting a load of at least 100 kg.

2.1.5 Installation Notice

- If Ethernet communication is selected, the device needs to be connected to the weak current box using a network cable. If SIM card communication is selected, there is no need to connect a network cable.
- When choosing the installation location for the charging station, avoid selecting a position that is exposed to direct sunlight or susceptible to external impact.
- For wall-mounted and column installations, we recommend adding an additional 60 cm of cable length.
- Ensure that there is a minimum free space of 600 mm around the charging station.
- The height of the connector for the cable version should be above 500 mm from the ground.
- The chosen location should not result in sharp bends in the charging cable.
- The input/output power line of the system is introduced and extracted from the bottom of the charging body, and the power cable should be laid through the cable trench.
- AC power supply should use 230 V for single-phase and 400 V for three-phase.
- AC power line is recommended to use copper core wire. The cross-sectional area is recommended to be 3 x 6 mm^2 (single-phase)/5 x 6 mm^2 (three-phase).
- Outdoor power lines should be laid according to electricity regulations, and the laying alignment of power line must be separated from the signal line.
- The AC input starts wiring from the user's power distribution switch and is connected to the incoming copper bar at the incoming switch of the charger. The user's power distribution should be equipped with overcurrent, short circuit, lightning protection and other protective devices.
- For single-phase, brown, blue, and yellow/green correspond to L (Live), N (Neutral), and PE (Protective Earth) respectively. For three-phase, brown, blue, black, gray, and yellow/green correspond to L1, L2, L3, N, and PE, respectively. If the power line has only one color, it is necessary to attach wire number identification (or use a marked casing).
- Broken, damaged, or scratched power lines cannot be used.

2.2 Installation Procedure

2.2.1 Wall Mount Installation

Background Information

Figure 2-3 Dimensions (mm [inch])

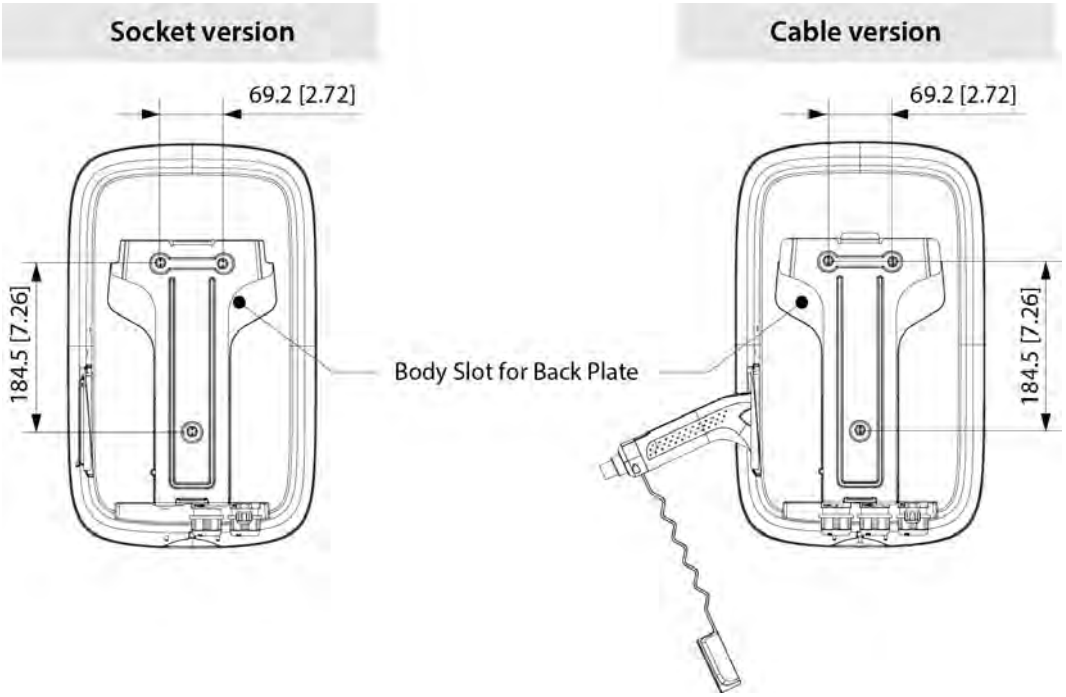

Figure 2-4 Installation diagram (socket version)

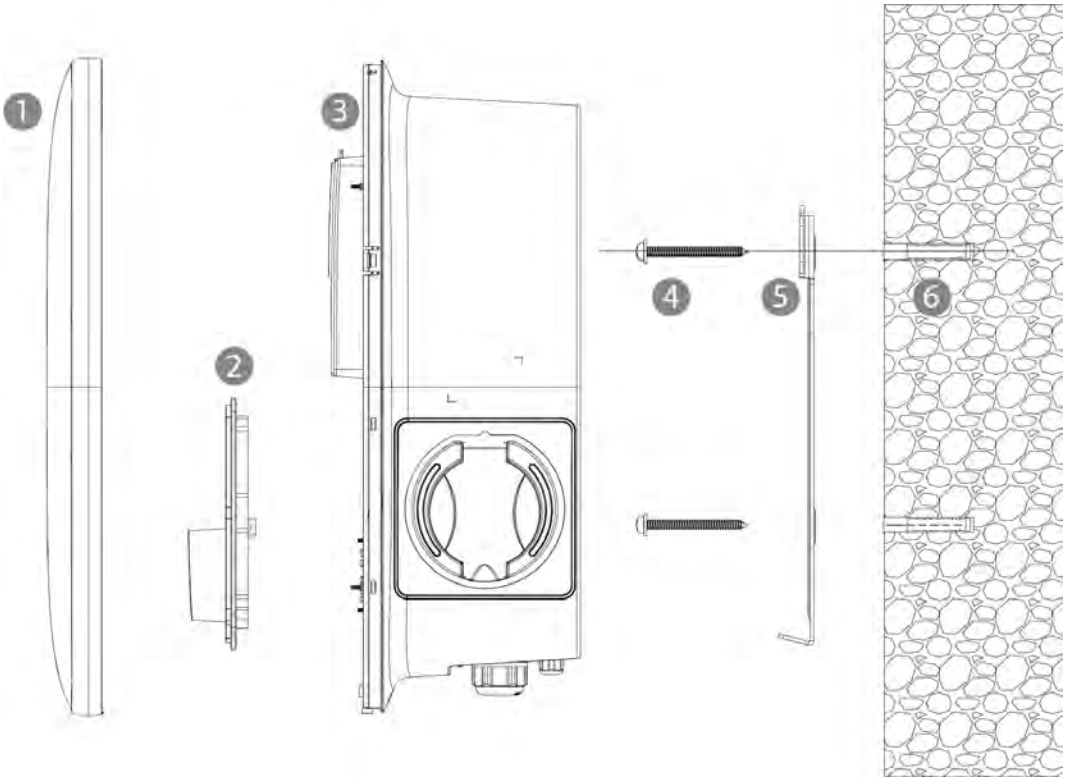

Table 2-3 Installation components

No.	Structural Attachments
1	Decorative cover
2	Waterproof cover
3	Charger body
4	Self-tapping screws (3-ST6.3 x 70)
5	The back plate
6	Expansion tube

Procedure

Step 1 Take out the positioning sticker, horizontally locate it with a spirit level, and stick it in a proper position.

Figure 2-5 Stick positioning sticker

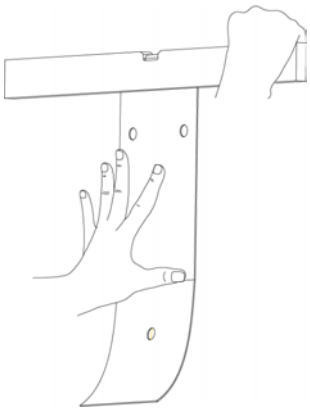

Step 2 Use a 10 mm diameter drill bit to drill three 75 mm deep holes in the corresponding positions on the sticker, and insert an expansion tube into each hole.

Figure 2-6 Drill holes

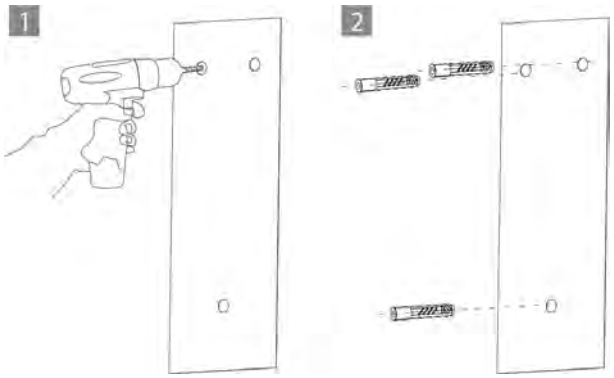

Step 3 Align the back plate with the installation holes, and then use three 6.3 x 70 mm screws and flat washers to fix it to the wall.

Figure 2-7 Fix the back plate

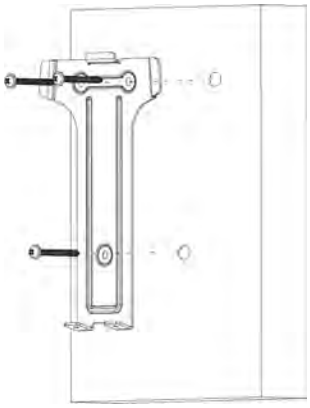

Step 4 Insert the charger body into the back plate, and then align it with the bottom screw hole, so that the charger body is hung on the back plate.

Figure 2-8 Insert the charger body

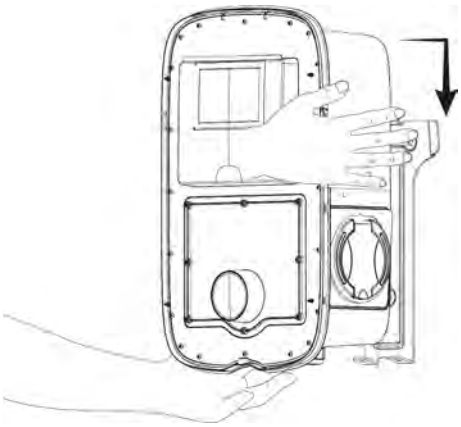

Step 5 After ensuring that the charger body completely fits the back plate, use a hexagonal wrench to fix the charger body to the back plate with M4 x 12 screws.

Ensure that the charger body is stable without shaking, indicating that the installation is complete.

Figure 2-9 Fix the charger body

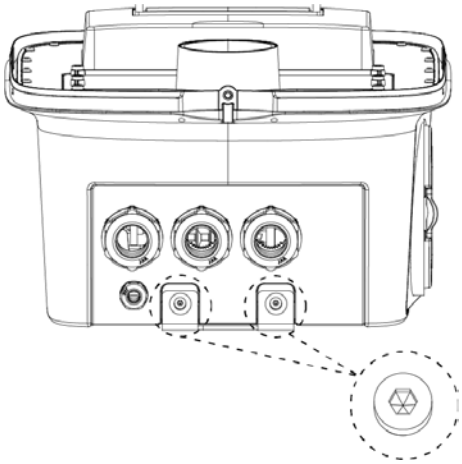

2.2.2 Column Installation

The installation process of the charger on a stand column is similar to that of the wall mounted method, with the primary distinctions lying in the installation of the stand column itself and the wiring arrangements.

Background Information

Figure 2-10 Dimensions (mm [inch])

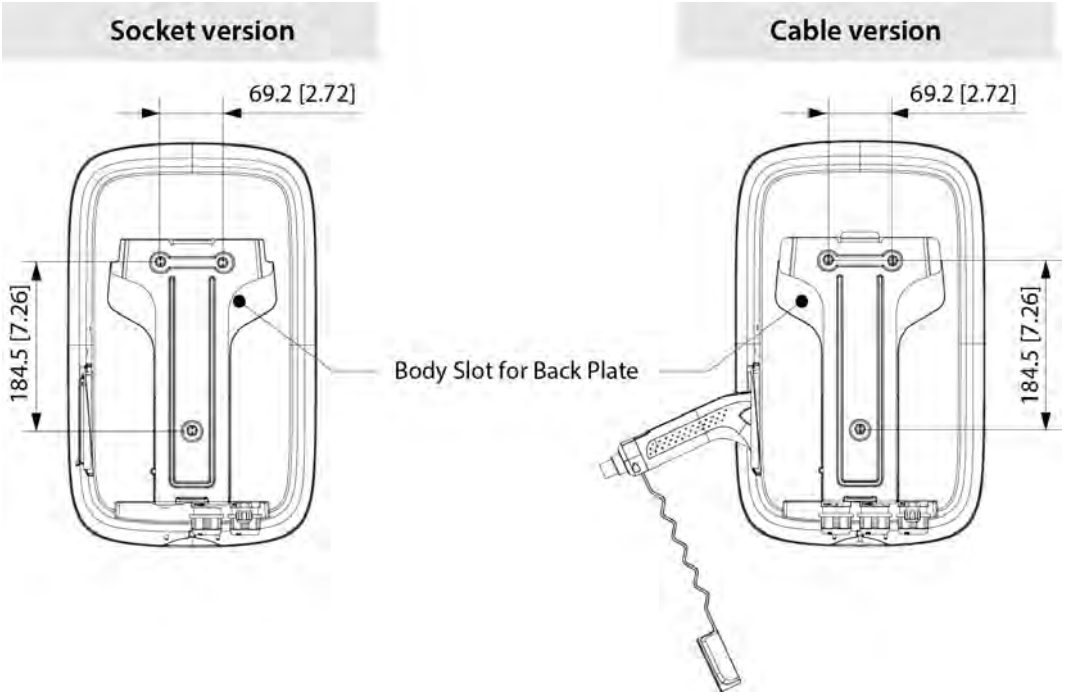

Figure 2-11 Installation diagram (socket version)

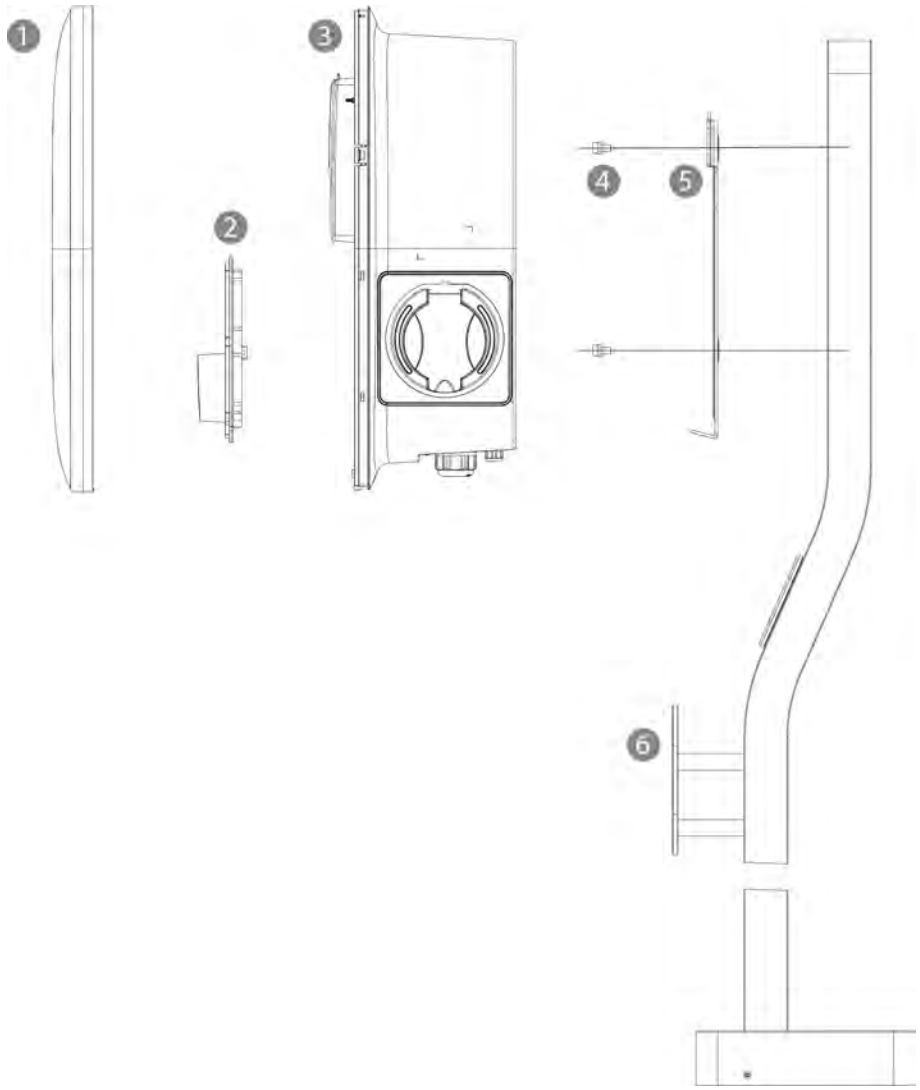

Table 2-4 Installation components

No.	Structural Attachments
1	Decorative cover
2	Waterproof cover
3	Charger body
4	Cross recessed machine screw (3-M6 x 12)
5	The back plate
6	Bracket

Procedure

Step 1 After determining the approximate installation location of the stand column, manually insert the cable into the interior of the stand column from the bottom area.

Figure 2-12 Insert the cable

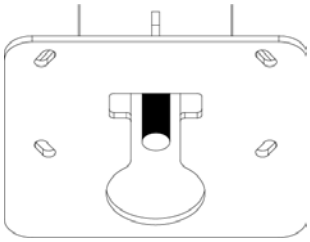

Step 2 Remove the 4 crosshead screws on the back of the stand column to facilitate cable management and routing upward.

Figure 2-13 Remove the 4 crosshead screws

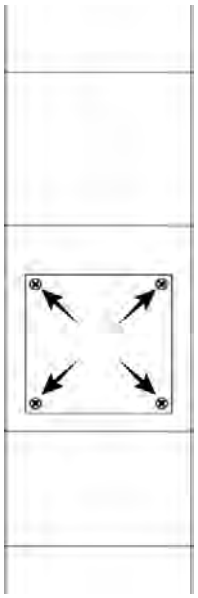

Step 3 Use a knife to cut open the cross slot in the middle of the protective coil on the front of the stand column, and pull the cable through this position.

Figure 2-14 Cut open the cross slot

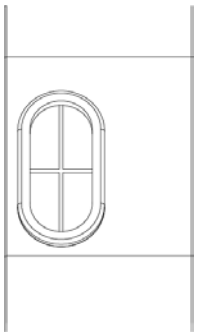

Step 4 Position the stand column in a suitable location, mark the holes, drill, and install expansion bolts. After installation and fixation, install the decorative cover of the base plate in the order shown in the following figure, and fasten the corresponding screws.

Figure 2-15 Install the decorative cover

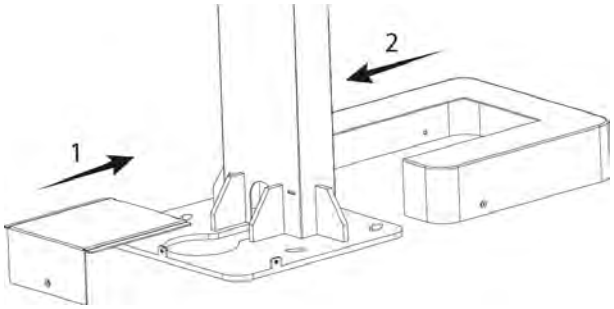

Step 5 Align the holes on the back plate with those on the stand column, and secure them with M6 combination screws to ensure a tight and reliable fit. This completes the installation of the stand column.

Figure 2-16 Fix the back plate

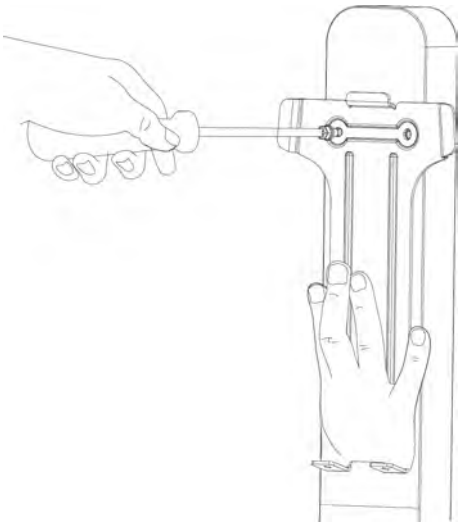

Step 6 Repeat Step 4 –Step 5 of the wall mounted installation process to secure the charging station to the stand column.

2.3 Connecting the Cable

The wiring terminal of the charger is marked with single-phase L, N, PE; three-phase L1, L2, L3, N, PE. Strictly follow the wiring identification. Ensure the safety distance between electrical components and between electrical components and the chassis.

Figure 2-17 Interface

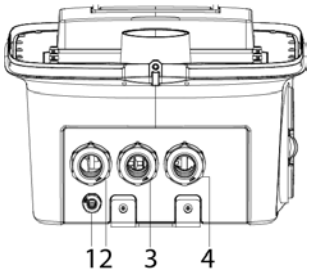

Table 2-5 Description of interface

No.	Description
1	Ethernet interface
2	Signal interface
3	Power input interface
4	Charging cable interface

2.3.1 Connecting the Network Cable

Procedure

Step 1 Disassemble the nut of the waterproof connector.

Figure 2-18 Connect the network cable (1)

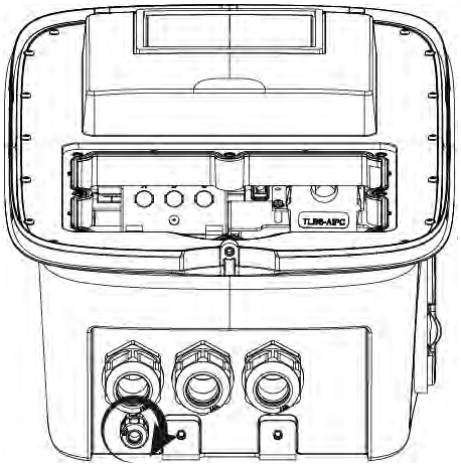

Step 2 Insert the waterproof connector nut into the network cable, and then insert the network cable into the corresponding interface of the charging body.

Figure 2-19 Connect the network cable (2)

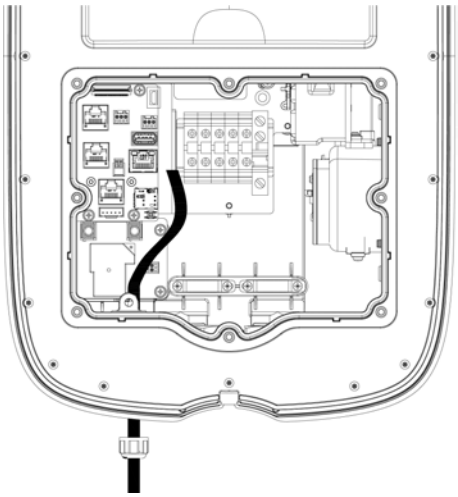

Step 3 Reserve an appropriate length of cable, strip the front end of the network cable, install the crystal joint, and pay attention to the order of the crystal joint.

Step 4 Reserve a suitable length of cable and install a RJ–45 connector on the network cable. Insert network cable into the network port.

Please ensure that the cable sequence of the network cable is correct.

The cable connection of RJ–45 connector conforms to the standard 568B (1-orange & white, 2-orange, 3-green & white, 4-blue, 5-blue & white, 6-green, 7-brown & white, 8-brown).

Figure 2-20 Ethernet port pin number

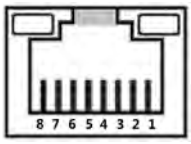

Figure 2-21 Connect network cable (3)

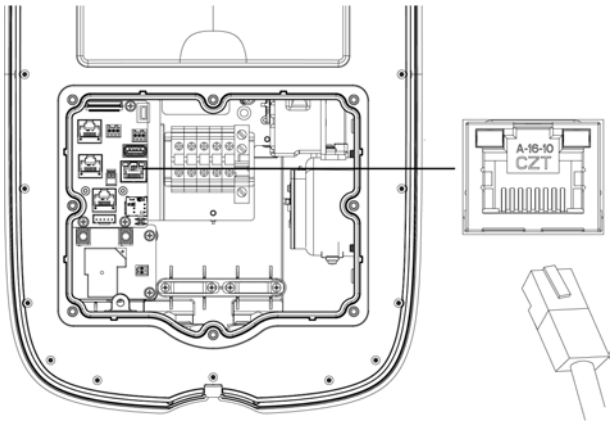

Step 5 Leave a suitable length of network cable inside the charger, and tighten the nut of the waterproof connector.

Step 6 Remove the waterproof connector at the number 2 signal interface and pass the signal line through. Based on your requirements, connect the signal line to the corresponding interface of the charger. After organizing the internal wiring, tighten the waterproof connector to complete the installation of the signal line.

Step 7 Insert the SIM card into the corresponding card slot. Pay attention to the direction of the SIM card notch when inserting.

Figure 2-22 Insert SIM card

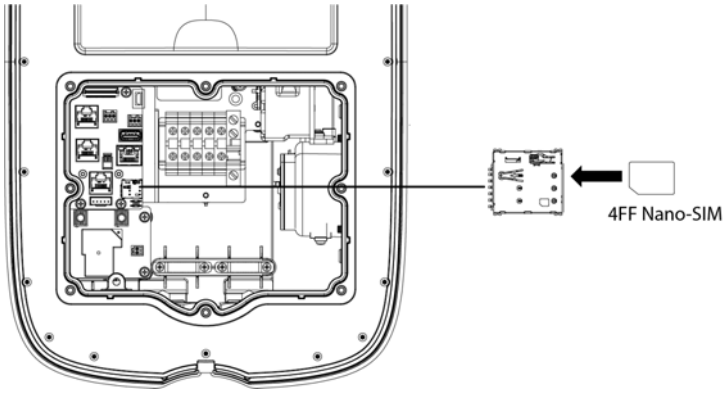

2.3.2 Connecting the Power Cable

Procedure

Step 1 Remove the waterproof connector at the power interface and slide it onto the cable.

Figure 2-23 Connect power cable (1)

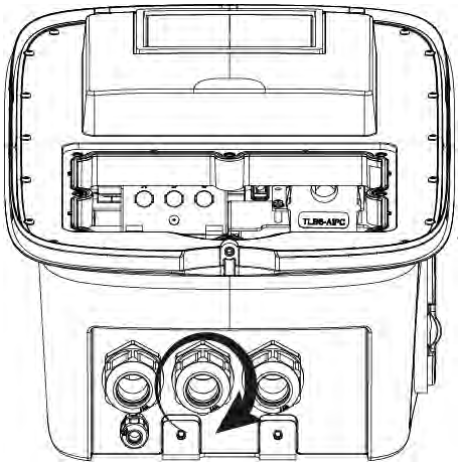

Step 2 Strip out the 6 mm^2 bare copper wire inside the cable, ensuring that the exposed bare copper length for wiring is ≥ 15 mm.

Figure 2-24 Connect power cable (2)

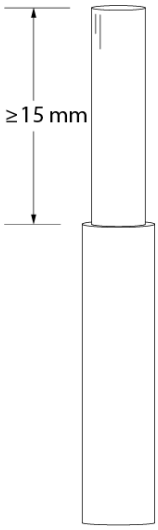

Step 3 Insert the cable into the power input interface.

Based on the power connection method, different installation methods can be referred to.

1. Rotate and loosen the slotted screw at the wiring terminal block.
2. Insert the stripped wire into the terminal block according to the sequence shown in the figure below.
3. Rotate the slotted screw of the wiring terminal block, press the wire so that it cannot be pulled away. If the wire does not move when pulled in the opposite direction, it indicates successful wire connection.
4. Insert the cable into the wire pressing slot and fix it with a wire pressing plate.

5. Return waterproof joint to position and tighten.
6. If the selected charging station is three-phase, but the user's actual power supply is connected as single-phase, only the L1 phase line can be used for input connection.

Figure 2-25 Single-phase and cable version

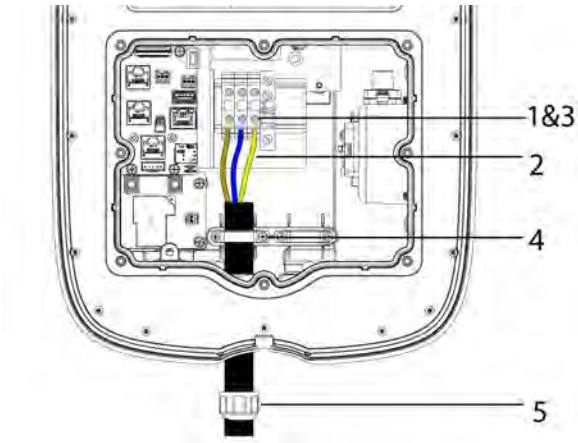

Figure 2-26 Three-phase and socket version

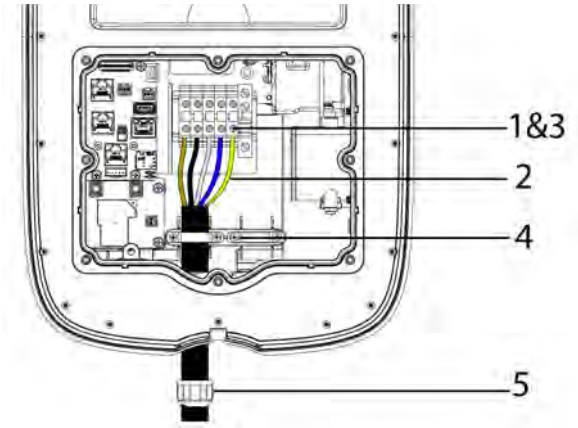

2.4 Completing the Installation

Tighten the decorative cover and equipment buckles, and then use the hexagonal wrench in the accessory kit to install the hexagonal screw at the bottom.

Figure 2-27 Fix the decorative cover

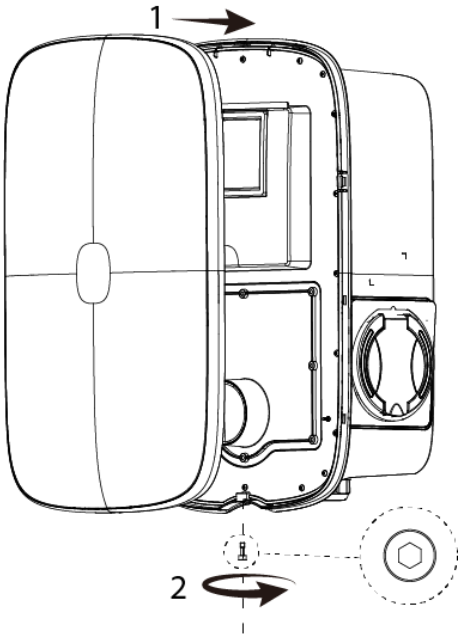

3 Operation Instructions

3.1 Initializing by App

Prerequisites

Download and install the D-Volt app from Google Play or Apple App Store.

For first-time users

Select **Create an account** to register.

- Username will be your email address or phone number.
- The same character cannot appear 5 times or more in the password.
- The password cannot be the same as the username or the reverse of the username.
- The password must be between 8 and 32 characters and must include at least 2 types of characters (excluding ";:'<>/\&() and space symbols).

Figure 3-1 Register and login

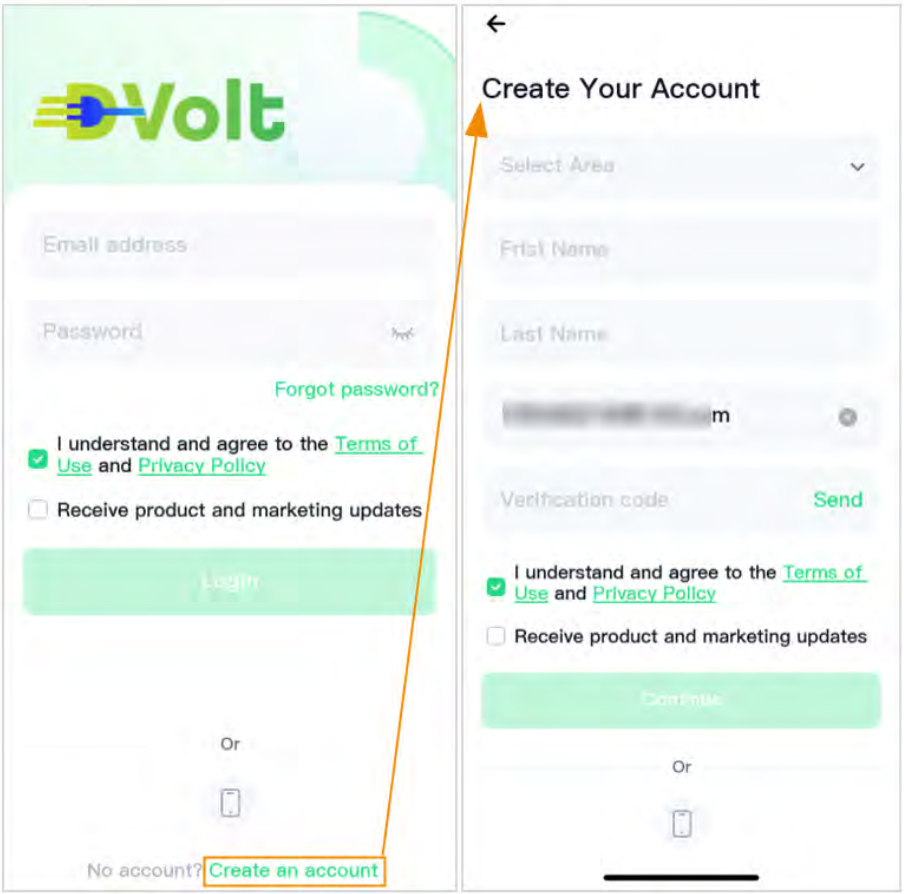

Already have an account

You can login either by email or by phone number.

Figure 3-2 Login

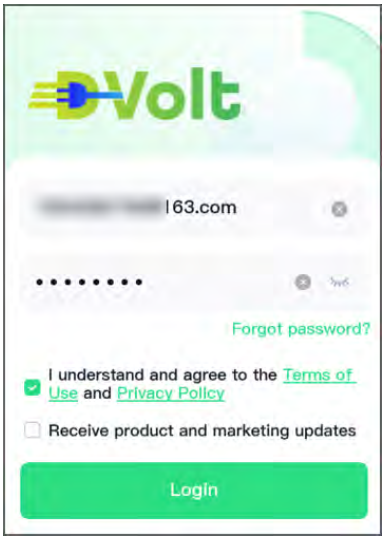

3.2 Resetting the Password

If you forget your password, you can select **Forgot password?** to reset it.

Figure 3-3 Password recovery

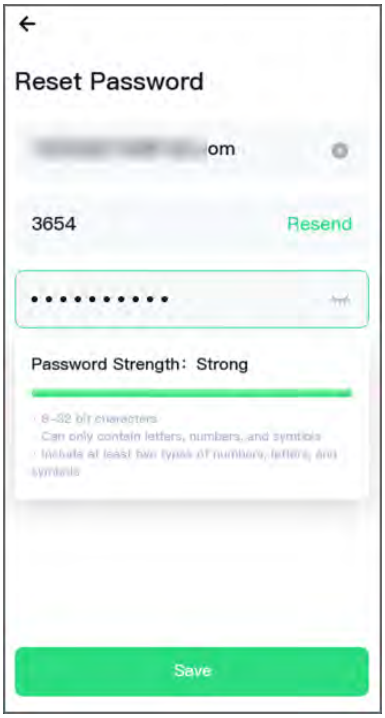

3.3 Adding Chargers and Connecting to the Cloud Service

Procedure

Step 1 Select the **Charger** tab, and then tap **Add Device**.

Step 2 Select the **Add with QR Code and Bluetooth**.

Figure 3-4 Add the device

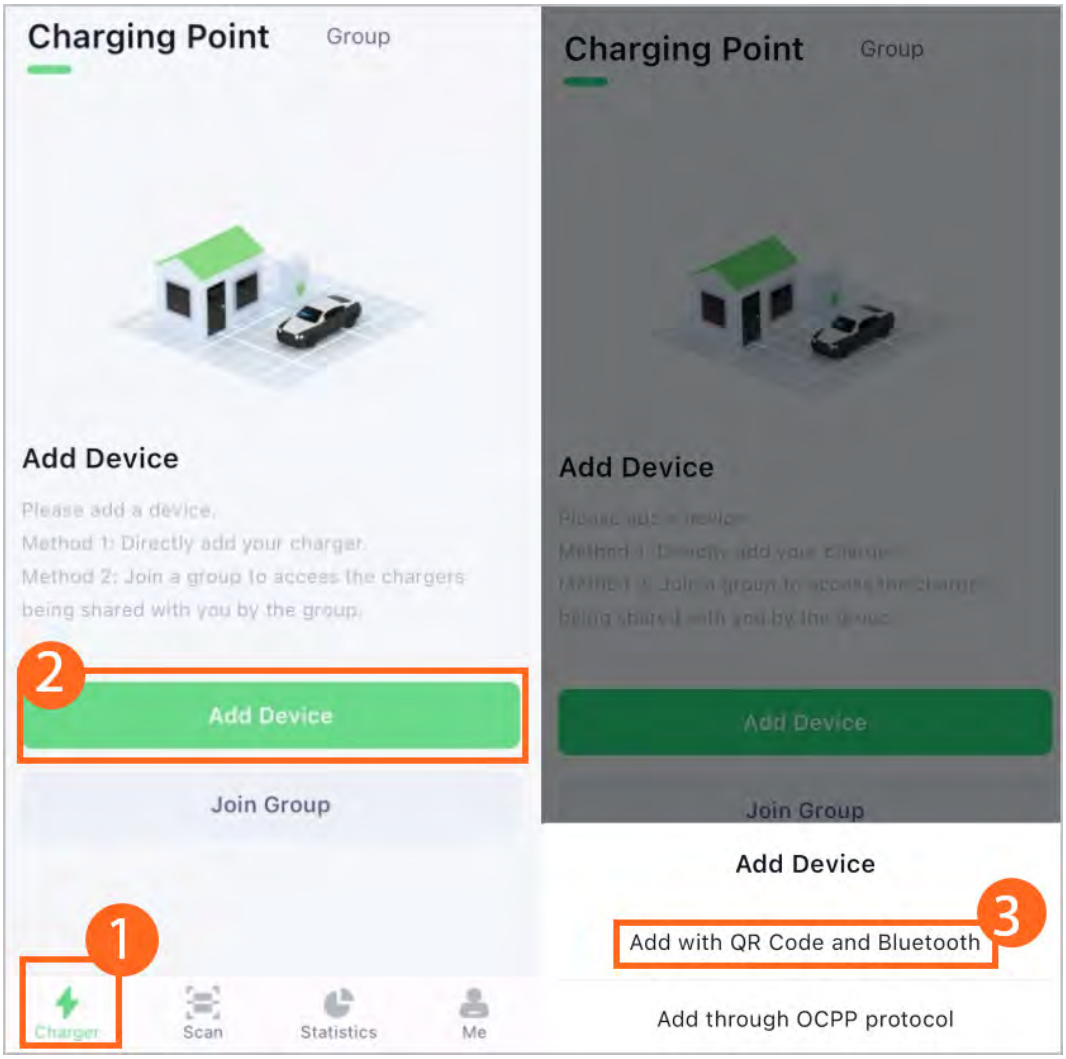

Step 3 Scan the QR code on the charger, or tap **S/N** at the lower-left to manually enter the device serial number.

Step 4 Create a password for charger, provide an email address for password recovery, and then tap **Set up and add**.

Figure 3-5 Enter S/N

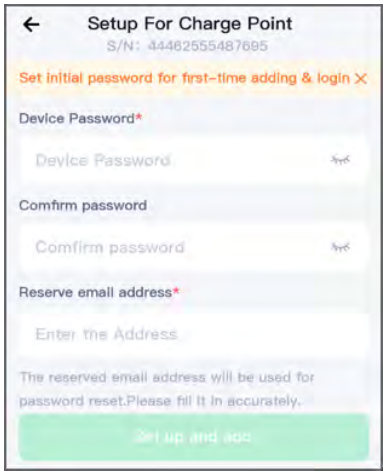

Step 5 Select the scenario: home use or commercial use.

- If you want to use the chargers for home use, select **Home Group User**.
- If the chargers will be used in operation station, select **Operator User**.

Figure 3-6 Group selection

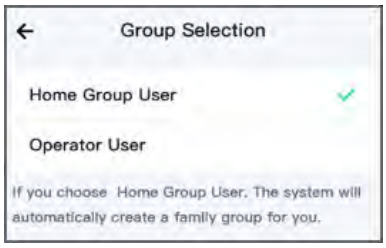

Step 6 Select **Network Connection** (Wi-Fi, Ethernet, or 4G).

- Wi-Fi

  1. Enable Wi-Fi mode on your phone, and then tap **Enable**.
  2. Choose a Wi-Fi network, enter the password for connection, and then tap **Connecting**.

The device does not support the 5 GHz Wi-Fi, connect your phone to the 2.4 GHz Wi-Fi, and make sure the 2.4 GHz Wi-Fi name is not the same as the 5 GHz Wi-Fi .

Figure 3-7 Wi-Fi

- Ethernet: Connect the Ethernet cable to the charger and follow the on-screen instructions to complete the operation.

Figure 3-8 Ethernet

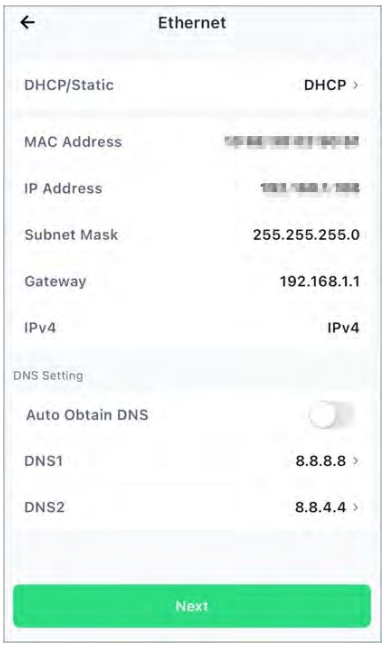

- 4G SIM Card: Insert a SIM card into the charger and follow the on-screen instructions to complete the operation.

Figure 3-9 4G

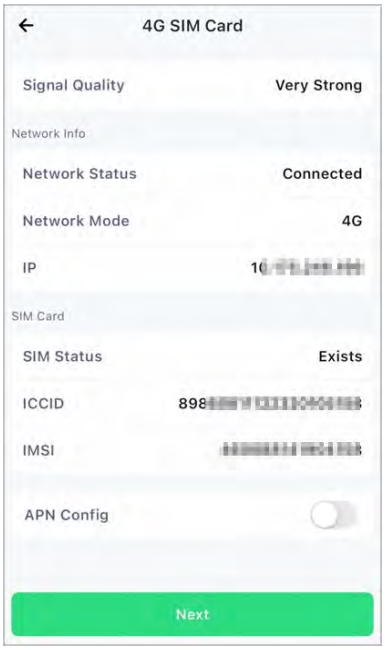

Step 7 Connect to the cloud service.

Once the charger is connected to the cloud platform and linked to your account, remote control functionality is active.

Figure 3-10 Device cloud connectivity

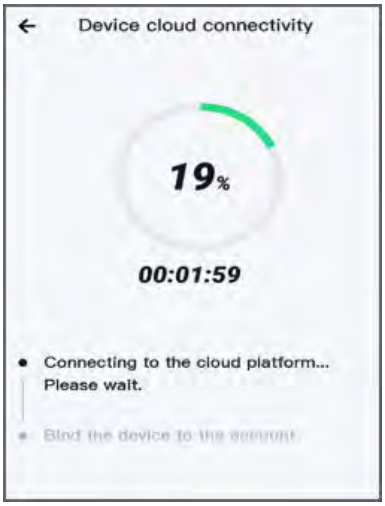

3.4 Charging Points Management

Procedure

Step 1 Select **Charger** > **List View**, check the connected charging devices.

Step 2 Tap the ··· to edit device information, remote settings, Bluetooth settings or delete the device.

Figure 3-11 More operations

- **Edit Details** allows you to edit the information of the charger.

Figure 3-12 Edit details

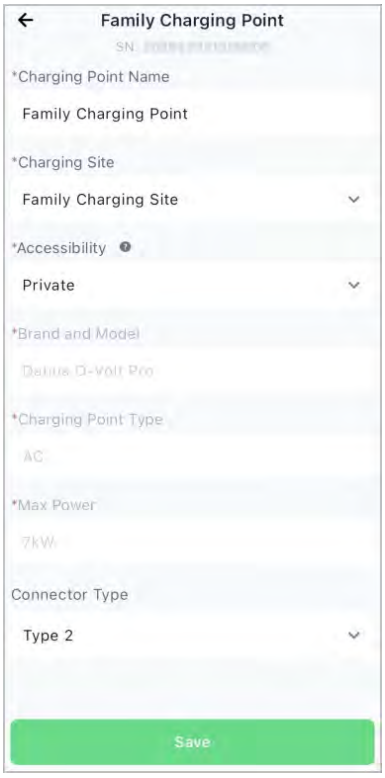

- **Remote Config** /**Bluetooth Config** allows configuration and monitoring.

Figure 3-13 Bluetooth settings

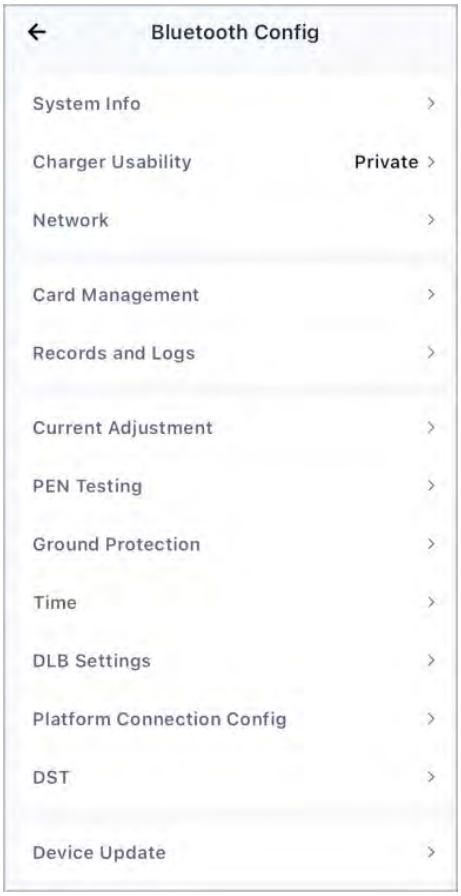

Table 3-1 Description of setting

Parameter	Description
System Info	View system information of the charger, and change device password.
Charger Usability	● Includes 3 types: **Private** , **Public**, and **Plug and Play**. ◇ For commercial scenarios, choose **Public**. ◇ For home use scenario, choose **Private**. ◇ Charging without authentication process, choose **Plug and Play**. ◇ Switching the charger usability mode will cause the device to go offline for a short period of time. ◇ Different devices support different functions. Please refer to the actual screen. ● Usage method: Supports swiping card.
Network	When the **Bluetooth Setting** is selected, you can configure it.
Card Management	This is for RFID card pairing. Once enabled, swiping an RFID card on the card reader of the device will automatically read the card number for authentication.
Records and Logs	View charger records and log information.
Current Adjustment	Allows adjustment of the device current control.
PEN Testing	In the open state, if a corresponding fault is detected, an alarm will be triggered. This feature is exclusively supported by PEN devices.
Ground Protection	Configure ground protection.
Time	Set the time zone.
DLB Settings	The dynamic load balancing function automatically balances the charger's electricity usage to prevent overloading the electrical system when multiple appliances are being used. ● Default is 6 A, configurable maximum household load allowance (from 6 A to 63 A). ● After DLB installation, configure it according to the actual household current conditions. It will then automatically enable load balancing function. ● Before configuration, confirm the maximum current rating of the household circuit breaker, and then proceed with the current settings.
Platform Connection Config	Platform connection settings.
Electronic Lock	Configure the electronic lock setting.
DST	Set daylight-saving time.
Device Update	Upgrade device firmware.

3.5 (Optional) DLB Installation Instructions

We have 2 models of DLB:

- Single-phase: DHI-ICS-ME-CT-1L. Single-phase DLB is suitable for home use when the power input of the house is a single-phase cable.

Figure 3-14 Single-phase

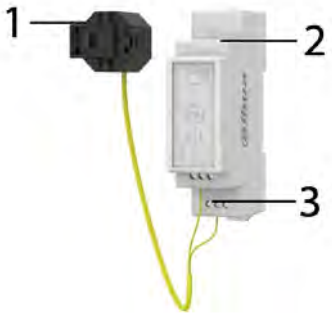

Table 3-2

No.	Name
1	Current transformer
2	RJ45
3	Junction

- Three-phase: DHI-ICS-ME-CT-3L. Three-phase DLB is suitable for home use when the power input of the house is a three-phase cable.

Figure 3-15 Three-phase

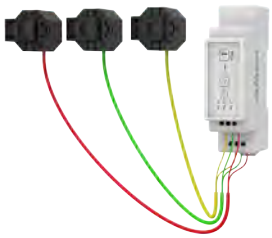

3.5.1 Preparations

Preparations for installation

- Confirm the maximum current of each phase for the house. This value defines the maximum capacity configuration of the dynamic load balancing.

- Ensure that the distance from the charging station to the DLB adapter is not too long (the installation length of unshielded network cables must not exceed 30 meters; the installation length of shielded network cables must not exceed 150 meters).
- Ensure that there is enough space on the DIN rail inside the home power distribution box to install the DLB adapter.

Tools and materials required for installation

Table 3-3 List of tools and materials

Name	Quantity
Screwdriver	1
Wire cutter	1
RJ45 crimping tool	1
Tape measure	1
RJ45 Ethernet connector	1
Network cable	1

3.5.2 Installation Diagram

Figure 3-16 Installation diagram

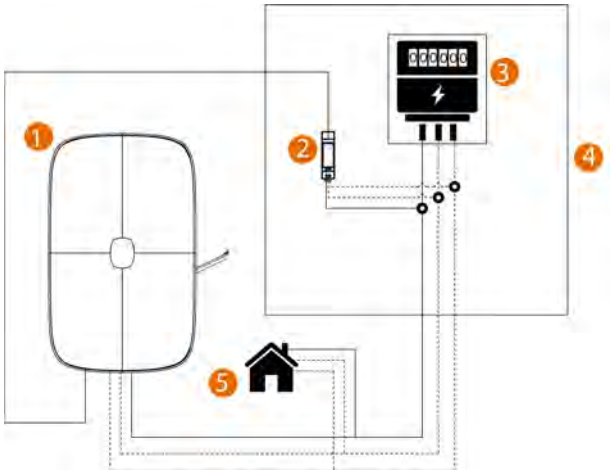

Table 3-4 Description of the part

No.	Name
1	Charging station
2	DLB adapter
3	Electric meter
4	Distribution cabinet
5	Household electricity

3.5.3 Installation

Procedure

Step 1 In the distribution box, disconnect the charging station's switch and post warning signs to prevent accidental power supply to the charging station during installation.

Step 2 Install the DLB adapter on the DIN rail of the distribution box according to the steps shown in the diagram.

Figure 3-17 Install the DLB adapter

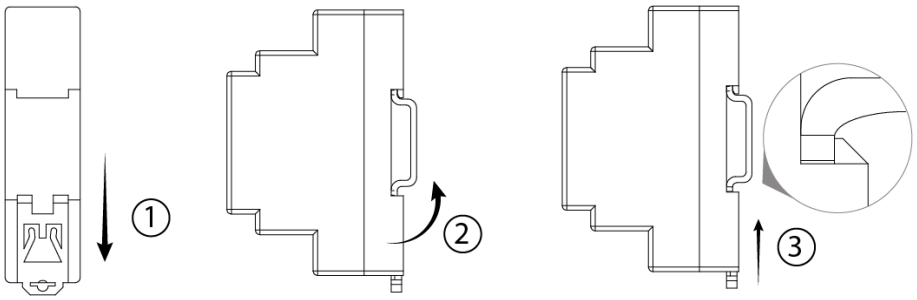

Step 3 In the distribution box, install the current transformer of DLB in sequence on the phase line of the household main input power (the phase line must have an insulation protective layer).

The direction arrow on the current transformer must point from the electrical meter to the charging station.

Figure 3-18 Install the current transformer of DLB (three-phase)

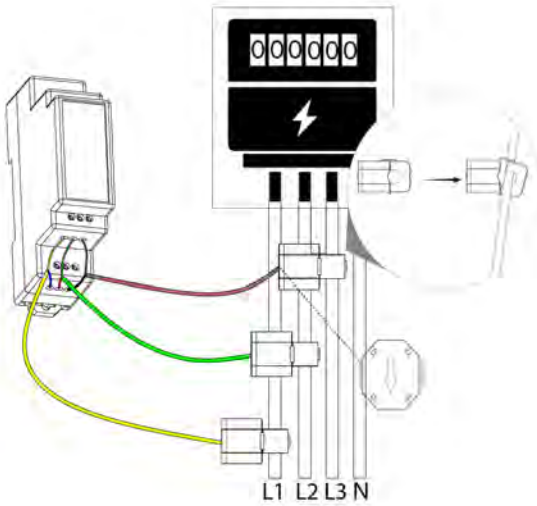

Figure 3-19 Install the current transformer of DLB (single-phase)

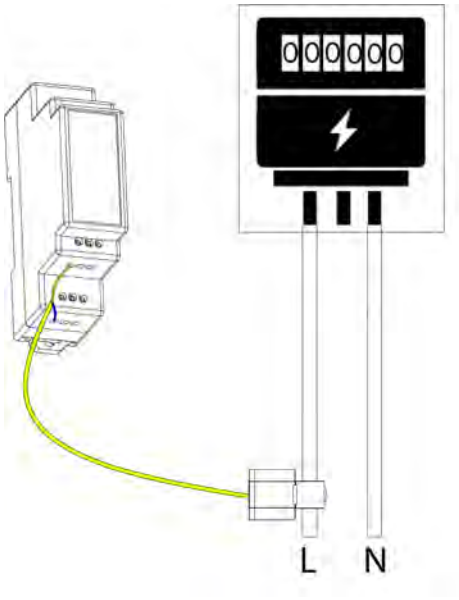

Step 4 Run the network cable from the distribution cabinet to the charger, leaving an appropriate length at both ends for easy connection.

- If the current transformer is installed on a phase line without insulation, it might result in product damage, or even cause injury or death to personnel.
- Ensure that the current transformer is installed on the phase line of the main power supply in the home, and install it in the right direction and correct order.
- Read the label on the current transformer to ensure the correct installation direction.
- If you use phase rotation method for installation, please make sure that the current transformer matches the phase rotation.
- After installation, use a cable tie to secure the wires of the current transformer to prevent them from entangling with other wires.
- If you have a three-phase meter but the selected equipment is a single-phase charging station, the current transformer (CT) must match the phase of the connected power supply.
- If you have a three-phase meter and the selected equipment is a three-phase charging station, but the actual connection is single-phase, the charging station's input line must be connected only to the L1 phase. The supply phase on the meter side must match the phase where the current transformer (CT) is installed.

Step 5 Install the network cable as shown in the figure, with one end of the cable connected to the DLB adapter and the other end connected to the charging station.

If the network cable does not come with a pre-installed RJ45 connector, it is necessary to manually crimp the RJ45 connector and then insert it into the DLB adapter interface.

Figure 3-20 The other end of the cable connected to the charging station

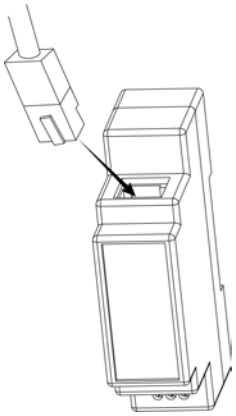

Step 6 Open the wiring cover of the charging station, thread the network cable through the bottom inlet of the charger, and insert it into the DLB socket reserved on the interface board.

Figure 3-21 Wiring and plugging into sockets

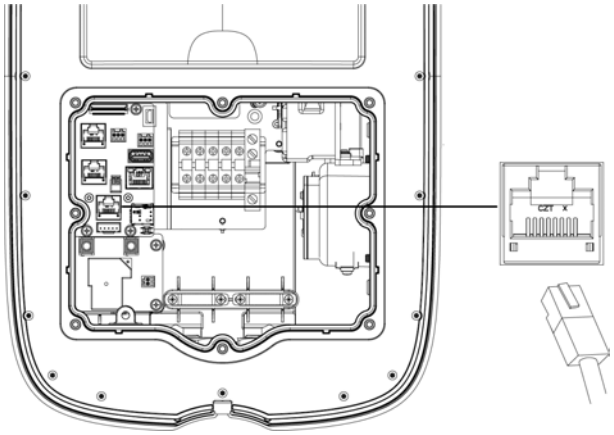

Step 7 Install the wiring cover and panel of the charging station.

Step 8 In the distribution box, turn on the switch of the charging station.

4 Troubleshooting

4.1 LED Indicator

Table 4-1 LED indicator

State Description	LED Indicator Color
Starting	Yellow
Available	Green
The charging cable has been connected	Green flashing
Charging	Blue flashing
Finished	Green flashing
Charging fault	Red flashing
Software upgrading	Yellow
Reserved	Blue
Restore to factory settings	Yellow

4.2 Error Code

Table 4-2 Error code

Fault Code	Fault Description
000002	CP voltage fault
000003	The voltage is too high
000004	The voltage is too low
000005	Overcurrent error
000006	Relay overheating
000007	Relay overheating
000008	Current leakage
000009	Failed to control the power switch
000010	Failed to control the power switch
000011	Metering chip fault
000012	Failed to read the card
000013	Flash memory fault
000014	RCD initialization fault
000015	Grounding error
000016	Short circuited

Fault Code	Fault Description
000017	Failed to read the electric meter
000018	Electronic Lock Fault
000019	Reverse polarity of neutral and live wire
000020	Overheating RCD
000021	PEN protection triggered

Appendix 1 Glossary

Appendix Table 1-1Glossary

Abbreviation	Meaning
1P	1-phase power supply (input and output). The station rating is shown on the bottom of the station.
3P	3-phase power supply (input and output). The station rating is shown on the bottom of the station.
AC	Alternating current.
DSO	Distribution system operator. The operator responsible for the electrical power supply network.
EV	Electric vehicle.
RF	Radio frequency communication.
LED	Light emitting diode.
MCB	Miniature circuit breaker.
OCPP	Open charge point protocol.
RCD	Residual current device.

Appendix 2 EU Declaration of Conformity

Appendix Table 2-1Regulatory information

Technology	Frequency Bands	Max. Output Power (EIRP)
WLAN (802.11B/G/N)	2400–2483.5 MHz	20 dBm
Bluetooth	2400–2483.5 MHz	20 dBm
GSM/GPRS900	880–915 MHz	35 dBm
GSM/GPRS1800	1710–1785 MHz	32 dBm
WCDMA B1	1920–1980 MHz	25 dBm
WCDMA B8	880–915 MHz	25 dBm
LTE B1	1920–1980 MHz	25 dBm
LTE B3	1710–1785 MHz	25 dBm
LTE B7	2500–2570 MHz	25 dBm
LTE B8	880–915 MHz	25 dBm
LTE B20	832–862 MHz	25 dBm
LTE B28	703–733 MHz	25 dBm
LTE B38	2570–2620 MHz	25 dBm
LTE B40	2300–2400 MHz	25 dBm
LTE B41	2555–2655 MHz	25 dBm

Appendix 3 Security Commitment and Recommendation

Dahua Vision Technology Co., Ltd. (hereinafter referred to as "Dahua") attaches great importance to cybersecurity and privacy protection, and continues to invest special funds to comprehensively improve the security awareness and capabilities of Dahua employees and provide adequate security for products. Dahua has established a professional security team to provide full life cycle security empowerment and control for product design, development, testing, production, delivery and maintenance. While adhering to the principle of minimizing data collection, minimizing services, prohibiting backdoor implantation, and removing unnecessary and insecure services (such as Telnet), Dahua products continue to introduce innovative security technologies, and strive to improve the product security assurance capabilities, providing global users with security alarm and 24/7 security incident response services to better protect users' security rights and interests. At the same time, Dahua encourages users, partners, suppliers, government agencies, industry organizations and independent researchers to report any potential risks or vulnerabilities discovered on Dahua devices to Dahua PSIRT, for specific reporting methods, please refer to the cyber security section of Dahua official website.

Product security requires not only the continuous attention and efforts of manufacturers in R&D, production, and delivery, but also the active participation of users that can help improve the environment and methods of product usage, so as to better ensure the security of products after they are put into use. For this reason, we recommend that users safely use the device, including but not limited to:

Account Management

1. **Use complex passwords**

   Please refer to the following suggestions to set passwords:

   - The length should not be less than 8 characters;
   - Include at least two types of characters: upper and lower case letters, numbers and symbols;
   - Do not contain the account name or the account name in reverse order;
   - Do not use continuous characters, such as 123, abc, etc.;
   - Do not use repeating characters, such as 111, aaa, etc.
2. **Change passwords periodically**

   It is recommended to periodically change the device password to reduce the risk of being guessed or cracked.
3. **Allocate accounts and permissions appropriately**

   Appropriately add users based on service and management requirements and assign minimum permission sets to users.
4. **Enable account lockout function**

   The account lockout function is enabled by default. You are advised to keep it enabled to protect account security. After multiple failed password attempts, the corresponding account and source IP address will be locked.
5. **Set and update password reset information in a timely manner**

   Dahua device supports password reset function. To reduce the risk of this function being used by threat actors, if there is any change in the information, please modify it in time. When setting security questions, it is recommended not to use easily guessed answers.

Service Configuration

1. **Enable HTTPS**

   It is recommended that you enable HTTPS to access Web services through secure channels.
2. **Encrypted transmission of audio and video**

   If your audio and video data contents are very important or sensitive, we recommend you to use encrypted transmission function in order to reduce the risk of your audio and video data being eavesdropped during transmission.
3. **Turn off non-essential services and use safe mode**

   If not needed, it is recommended to turn off some services such as SSH, SNMP, SMTP, UPnP, AP hotspot etc., to reduce the attack surfaces.

   If necessary, it is highly recommended to choose safe modes, including but not limited to the following services:

   - SNMP: Choose SNMP v3, and set up strong encryption and authentication passwords.
   - SMTP: Choose TLS to access mailbox server.
   - FTP: Choose SFTP, and set up complex passwords.
   - AP hotspot: Choose WPA2-PSK encryption mode, and set up complex passwords.
4. **Change HTTP and other default service ports**

   It is recommended that you change the default port of HTTP and other services to any port between 1024 and 65535 to reduce the risk of being guessed by threat actors.

Network Configuration

1. **Enable Allow list**

   It is recommended that you turn on the allow list function, and only allow IP in the allow list to access the device. Therefore, please be sure to add your computer IP address and supporting device IP address to the allow list.
2. **MAC address binding**

   It is recommended that you bind the IP address of the gateway to the MAC address on the device to reduce the risk of ARP spoofing.
3. **Build a secure network environment**

   In order to better ensure the security of devices and reduce potential cyber risks, the following are recommended:

   - Disable the port mapping function of the router to avoid direct access to the intranet devices from external network;
   - According to the actual network needs, partition the network: if there is no communication demand between the two subnets, it is recommended to use VLAN, gateway and other methods to partition the network to achieve network isolation;
   - Stablish 802.1x access authentication system to reduce the risk of illegal terminal access to the private network.

Security Auditing

1. **Check online users**

   It is recommended to check online users regularly to identify illegal users.
2. **Check device log**

By viewing logs, you can learn about the IP addresses that attempt to log in to the device and key operations of the logged users.

3. **Configure network log**

   Due to the limited storage capacity of devices, the stored log is limited. If you need to save the log for a long time, it is recommended to enable the network log function to ensure that the critical logs are synchronized to the network log server for tracing.

Software Security

1. **Update firmware in time**

   According to the industry standard operating specifications, the firmware of devices needs to be updated to the latest version in time in order to ensure that the device has the latest functions and security. If the device is connected to the public network, it is recommended to enable the online upgrade automatic detection function, so as to obtain the firmware update information released by the manufacturer in a timely manner.

2. **Update client software in time**

   We recommend you to download and use the latest client software.

Physical Protection

It is recommended that you carry out physical protection for devices (especially storage devices), such as placing the device in a dedicated machine room and cabinet, and having access control and key management in place to prevent unauthorized personnel from damaging hardware and other peripheral equipment (e.g. USB flash disk, serial port).

DVolt

ZHEJIANG DAHUA VISION TECHNOLOGY CO., LTD.
Address: No. 1399, Binxing Road, Binjiang District, Hangzhou, P. R. China
Website: www.dahuasecurity.com
Postcode: 310053
Email: dhoverseas@dhvisiontech.com
Tel: +86-571-87688888 28933188