AXIS Q8752-E Mk II Bispectral PTZ Network Camera

User manual

Table of Contents

Solution overview 4
.... 4
Get started 5
Find the device on the network 5
Browser support 5
Open the device's web interface 5
Create an administrator account 5
Secure passwords 6
Make sure that no one has tampered with the device software 6
Web interface overview 6
Configure your device 7
Basic settings 7
Adjust the image 7
Level the camera 7
Adjust the focus faster with focus recall areas 7
Select scene profile 8
Reduce image processing time with low latency mode 8
Select exposure mode 8
Benefit from IR light in low-light conditions by using night mode 8
Reduce noise in low-light conditions 9
Maximize the details in an image 9
Handle scenes with strong backlight 9
Stabilize a shaky image with image stabilization 10
Hide parts of the image with privacy masks 10
Show an image overlay 10
Show a text overlay 11
Show the pan or tilt position as a text overlay 11
Add street names and compass direction to the image 11
Adjust the camera view (PTZ) 11
Limit the pan, tilt, and zoom movements 11
Create a guard tour with preset positions 12
View and record video 12
Reduce bandwidth and storage 12
Set up network storage 13
Record and watch video 13
Set up rules for events 13
Trigger an action 13
Detect motion with the thermal channel and zoom in and record with the visual channel 13
Audio 14
Add audio to your recording 14
Add audio capability to your product using portcast 15
Set up washer 15
The web interface 16
Learn more 17
Color palettes 17
Privacy masks 17
Overlays 17
Pan, tilt, and zoom (PTZ) 17
Guard tours 17
Streaming and storage 17
Video compression formats 17
How do Image, Stream, and Stream profile settings relate to each other? 18
Bitrate control 18

Analytics and apps 20
Specifications 21
Product overview 21
LED indicators 22
SD card slot 23
Insert an SD card 23
Buttons 24
Control button 24
Connectors 24
Network connector 24
Power connector 24
Audio connector 24
I/O connector 24
Input power connector 25
Illuminator connectors 27
Clean your device 28
Troubleshooting 29
Reset to factory default settings 29
AXIS OS options 29
Check the current AXIS OS version 30
Upgrade AXIS OS 30
Technical problems and possible solutions 30
Performance considerations 32
Contact support 32
Cybersecurity 33
Vulnerability management 33
Security notifications 33
Secure product lifecycle 33

Solution overview

The AXIS Q87 Bispectral PTZ Network Camera is intended for mission-critical surveillance that demands 24-hour monitoring of restricted areas, such as airports.

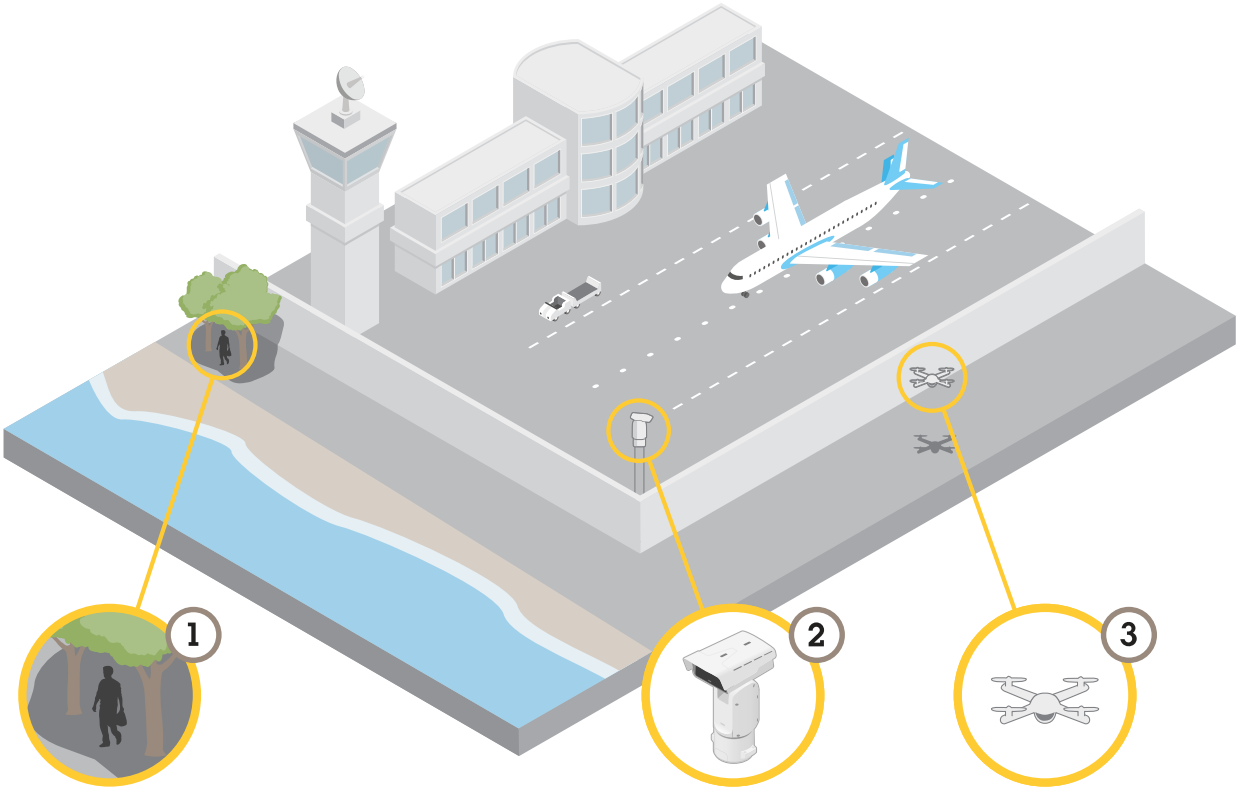

In difficult lighting conditions, the thermal channel can detect objects (1) that the visual channel can't. To take advantage of this, you can set up the thermal channel to automatically detect motion, and send a signal to the visual channel to zoom in and record. To find out more, go to *Detect motion with the thermal channel and zoom in and record with the visual channel, on page 13*.

The camera (2) is often installed in inaccessible locations. With the built-in wiper and optional washer you can remove, for example, sea salt from the front window without physically accessing the camera. To find out more, go to .

Thanks to the wide tilt range you can, for example, detect various flying objects (3).

Get started

Find the device on the network

To find Axis devices on the network and assign them IP addresses in Windows®, use AXIS IP Utility or AXIS Device Manager. Both applications are free and can be downloaded from *axis.com/support*.

For more information about how to find and assign IP addresses, go to *How to assign an IP address and access your device*.

Browser support

You can use the device with the following browsers:

	Chrome™	Edge™	Firefox®	Safari®
Windows®	✓	✓	*	*
macOS®	✓	✓	*	*
Linux®	✓	✓	*	*
Other operating systems	*	*	*	*

✓: Recommended

*: Supported with limitations

Open the device's web interface

1. Open a browser and type the IP address or host name of the Axis device.
   If you don't know the IP address, use AXIS IP Utility or AXIS Device Manager to find the device on the network.
2. Type the username and password. If you access the device for the first time, you must create an administrator account. See *Create an administrator account, on page 5*.

For descriptions of all features and settings in the web interface of devices with AXIS OS, see *AXIS OS web interface help*.

Create an administrator account

The first time you log in to your device, you must create an administrator account.

1. Enter a username.
2. Enter a password. See *Secure passwords, on page 6*.
3. Re-enter the password.
4. Accept the license agreement.
5. Click **Add account**.

Important

The device has no default account. If you lose the password for your administrator account, you must reset the device. See *Reset to factory default settings, on page 29*.

Secure passwords

Important

Use HTTPS (which is enabled by default) to set your password or other sensitive configurations over the network. HTTPS enables secure and encrypted network connections, thereby protecting sensitive data, such as passwords.

The device password is the primary protection for your data and services. Axis devices do not impose a password policy as they may be used in various types of installations.

To protect your data we strongly recommend that you:

- Use a password with at least 8 characters, preferably created by a password generator.
- Don't expose the password.
- Change the password at a recurring interval, at least once a year.

Make sure that no one has tampered with the device software

To make sure that the device has its original AXIS OS, or to take full control of the device after a security attack:

1. Reset to factory default settings. See *Reset to factory default settings, on page 29*.
   After the reset, secure boot guarantees the state of the device.
2. Configure and install the device.

Web interface overview

This video gives you an overview of the device's web interface.

To watch this video, go to the web version of this document.

Axis device web interface

Configure your device

This section covers all the important configurations that an installer needs to do to get the product up and running after the hardware installation has been completed.

Basic settings

Set the capture mode

1. Go to **Video > Installation > Capture mode**.
2. Click **Change**.
3. Select a capture mode and click **Save and restart**.
   See also .

Set the power line frequency

1. Go to **Video > Installation > Power line frequency**.
2. Select a power line frequency and click **Save and restart**.

Adjust the image

This section includes instructions about configuring your device. If you want to learn more about how certain features work, go to *Learn more, on page 17*.

Level the camera

To adjust the view in relation to a reference area or an object, use the level grid in combination with a mechanical adjustment of the camera.

1. Go to **Video > Image >** and click .
2. Click to show the level grid.
3. Adjust the camera mechanically until the position of the reference area or the object is aligned with the level grid.

Adjust the focus faster with focus recall areas

To save the focus settings at a specific pan/tilt range, add a focus recall area. Each time the camera moves into that area it recalls the previously saved focus. It's enough to cover half of the focus recall area in the live view.

We recommend the focus recall feature in the following scenarios:

- When there is a lot of manual operation in live view, for example with a joystick.
- Where PTZ preset positions with manual focus are not efficient, for example movements where the focus setting changes continuously.
- In low-light scenarios, where the autofocus is challenged by the lighting conditions.

Important

- The focus recall overrides the camera's autofocus at the specific pan/tilt range.
- A preset position overrides the focus setting saved in the focus recall area.
- The maximum number of focus recall areas is 20.

Create a focus recall area

1. Pan, tilt, and zoom into the area where you would like to have focus.

   As long as the focus recall button shows a plus , you can add a focus recall area in that position.
2. Adjust the focus.

3. Click the focus recall button.

Delete a focus recall area

1. Pan, tilt, and zoom into the focus recall area you want to delete.

   The focus recall button toggles to minus when the camera detects a focus recall area: .
2. Click the focus recall button.

Select scene profile

A scene profile is a set of predefined image appearance settings including color level, brightness, sharpness, contrast and local contrast. Scene profiles are preconfigured in the product for quick setup to a specific scenario, for example **Forensic** which is optimized for surveillance conditions. For a description of each available setting, see *The web interface, on page 16*.

You can select a scene profile during the initial setup of the camera. You can also select or change scene profile later.

1. Go to **Video > Image > Appearance**.
2. Go to **Scene profile** and select a profile.

Reduce image processing time with low latency mode

You can optimize the image processing time of your live stream by turning on low latency mode. The latency in your live stream is reduced to a minimum. When you use low latency mode, the image quality is lower than usual.

1. Go to **System > Plain config**.
2. Select **ImageSource** from the drop-down list.
3. Go to **ImageSource/IO/Sensor > Low latency mode** and select **On**.
4. Click **Save**.

Select exposure mode

Note

Exposure modes are only available for the visual channel.

To improve image quality for specific surveillance scenes, use exposure modes. Exposure modes lets you control aperture, shutter speed, and gain. Go to **Video > Image > Exposure** and select between the following exposure modes:

- For most use cases, select **Automatic** exposure.
- For environments with certain artificial lighting, for example fluorescent lighting, select **Flicker-free**. Select the same frequency as the power line frequency.
- For environments with certain artificial light and bright light, for example outdoors with fluorescent lighting at night and sun during daytime, select **Flicker-reduced**.
  Select the same frequency as the power line frequency.

Benefit from IR light in low-light conditions by using night mode

Your camera uses visible light to deliver color images during the day. But as the visible light diminishes, color images become less bright and clear. If you switch to night mode when this happens, the camera uses both visible and near-infrared light to deliver bright and detailed black-and-white images instead. You can set the camera to switch to night mode automatically.

1. Go to **Video > Image > Day-night mode**, and make sure that the **IR-cut filter** is set to **Auto**.

2. To set at what light level you want the camera to switch to night mode, move the **Threshold** slider toward **Bright** or **Dark**.
3. To use the built-in IR light when the camera is in night mode, turn on **Allow illumination** and **Synchronize illumination**.

Note

If you set the switch to night mode to occur when it's brighter, the image remains sharper as there is less low-light noise. If you set the switch to occur when it's darker, the image colors are maintained for longer, but there is more image blur due to low-light noise.

Reduce noise in low-light conditions

Note

Low-light settings are only available for the visual channel.

To reduce noise in low-light conditions, you can adjust one or more of the following settings:

- Adjust the trade-off between noise and motion blur. Go to **Video > Image > Exposure** and move the **Blur-noise trade-off** slider toward **Low noise**.
- Set the exposure mode to automatic.

Note

A high max shutter value can result in motion blur.

- To slow down the shutter speed, set max shutter to the highest possible value.
- If there is an **Aperture** slider, move it towards **Open**.

Maximize the details in an image

Important

If you maximize the details in an image, the bitrate will probably increase and you might get a reduced frame rate.

- Make sure to select the capture mode that has the highest resolution.
- Go to **Video > Stream > General** and set the compression as low as possible.
- Below the live view image, click and in **Video format**, select **MJPEG**.
- Go to **Video > Stream > Zipstream** and select **Off**.

Handle scenes with strong backlight

Dynamic range is the difference in light levels in an image. In some cases the difference between the darkest and the brightest areas can be significant. The result is often an image where either the dark or the bright areas are visible. Wide dynamic range (WDR) makes both dark and bright areas of the image visible.

Image without WDR.

Image with WDR.

Note

- WDR can cause artifacts in the image.
- WDR may not be available for all capture modes.

1. Go to **Video > Image > Wide dynamic range**.
2. Turn on WDR.
3. If you still have problems, go to **Exposure** and adjust the **Exposure zone** to cover the area of interest.

Find out more about WDR and how to use it at *axis.com/solutions/wide-dynamic-range-wdr*.

Stabilize a shaky image with image stabilization

Image stabilization is suitable in environments where the product is mounted in an exposed location where vibrations can occur, for example, due to wind or passing traffic.

The feature makes the image smoother, steadier, and less blurry. It also reduces the file size of the compressed image and lowers the bitrate of the video stream.

Note

When you turn on image stabilization, the image is slightly cropped, which lowers the maximum resolution.

1. Go to **Video > Installation > Image correction**.
2. Turn on **Image stabilization**.

Hide parts of the image with privacy masks

You can create one or several privacy masks to hide parts of the image.

1. Go to **Video > Privacy masks**.
2. Click + .
3. Click the new mask and type a name.
4. Adjust the size and placement of the privacy mask according to your needs.
5. To change the color for all privacy masks, click **Privacy masks** and select a color.

See also *Privacy masks, on page 17*

Show an image overlay

You can add an image as an overlay in the video stream.

1. Go to **Video > Overlays**.
2. Click **Manage images**.
3. Upload or drag and drop an image.
4. Click **Upload**.

5. Select **Image** from the drop-down list and click + .
6. Select the image and a position. You can also drag the overlay image in the live view to change the position.

Show a text overlay

You can add a text field as an overlay in the video stream. This is useful for example when you want to display the date, time or a company name in the video stream.

1. Go to **Video > Overlays**.
2. Select **Text** and click + .
3. Type the text you want to display, or select modifiers to show for example the current date.
4. Select a position. You can also click-and-drag the overlay in the live view to change the position.

Show the pan or tilt position as a text overlay

You can show the pan or tilt position as an overlay in the image.

1. Go to **Video > Overlays** and click + .
2. In the text field, type `#x` to show the pan position.
   Type `#y` to show the tilt position.
3. Choose appearance, text size, and alignment.
4. The current pan and tilt positions show up in the live view image and in the recording.

Add street names and compass direction to the image

Note

The preset positions and compass direction will be visible in the compass field in all video streams and recordings.

To activate the compass:

1. Go to **PTZ > Orientation aid**.
2. Turn on **Orientation aid**.
3. Position the camera view at north with the crosshair. Click **Set north**.

To add a preset position to show in the compass field:

1. Go to **PTZ > Preset positions**.
2. Use the crosshair to position the view where you want to add a preset position.
3. Click + **Add preset position** to create a new preset position.

Adjust the camera view (PTZ)

Limit the pan, tilt, and zoom movements

If there are parts of the scene that you don't want the camera to reach, you can limit the pan, tilt, and zoom movements. For example, you want to protect the privacy of residents in an apartment building, which is located close to a parking lot that you intend to monitor.

To limit the movements:

1. Go to **PTZ > Limits**.
2. Set the limits as needed.

Create a guard tour with preset positions

A guard tour displays the video stream from different preset positions either in a predetermined or random order, and for configurable periods of time.

1. Go to **PTZ > Guard tours**.
2. Click + **Guard tour**.
3. Select **Preset position** and click **Create**.
4. Under **General settings**:
   - Enter a name for the guard tour and specify the pause length between each tour.
   - If you want the guard tour to go to the preset positions in a random order, turn on **Play guard tour in random order**.
5. Under **Step settings**:
   - Set the duration for the preset.
   - Set the move speed, which controls how fast to move to the next preset.
6. Go to **Preset positions**.
   6.1. Select the preset positions that you want in your guard tour.
   6.2. Drag them to the View order area, and click **Done**.
7. To schedule the guard tour, go to **System > Events**.

View and record video

This section includes instructions about configuring your device. To learn more about how streaming and storage works, go to *Streaming and storage, on page 17.*

Reduce bandwidth and storage

Important

Reducing the bandwidth can lead to loss of detail in the image.

1. Go to **Video > Stream**.
2. Click ⚙ in the live view.
3. Select **Video format AV1** if your device supports it. Otherwise select **H.264**.
4. Go to **Video > Stream > General** and increase **Compression**.
5. Go to **Video > Stream > Zipstream** and do one or more of the following:

   Note

   The **Zipstream** settings are used for all video encodings except MJPEG.

   - Select the Zipstream **Strength** that you want to use.
   - Turn on **Optimize for storage**. This can only be used if the video management software supports B-frames.
   - Turn on **Dynamic FPS**.
   - Turn on **Dynamic GOP** and set a high **Upper limit** GOP length value.

Note

Most web browsers don't support H.265 decoding and because of this the device doesn't support it in its web interface. Instead you can use a video management system or application that supports H.265 decoding.

Set up network storage

To store recordings on the network, you need to set up your network storage.

1. Go to **System > Storage**.
2. Click + **Add network storage** under **Network storage**.
3. Type the IP address of the host server.
4. Type the name of the shared location on the host server under **Network share**.
5. Type the username and password.
6. Select the SMB version or leave it on **Auto**.
7. Select **Add share without testing** if you experience temporary connection issues, or if the share is not yet configured.
8. Click **Add**.

Record and watch video

Record video directly from the camera

1. Go to **Video > Stream**.
2. To start a recording, click .

   If you haven't set up any storage, click and . For instructions on how to set up network storage, see *Set up network storage, on page 13*
3. To stop recording, click again.

Watch video

1. Go to **Recordings**.
2. Click for your recording in the list.

Set up rules for events

You can create rules to make your device perform an action when certain events occur. A rule consists of conditions and actions. The conditions can be used to trigger the actions. For example, the device can start a recording or send an email when it detects motion, or show an overlay text while the device is recording.

To learn more, see *Get started with rules for events*.

Trigger an action

1. Go to **System** > **Events** and click **+ Add a rule**. The rule defines when the device will perform certain actions. You can set up rules as scheduled, recurring, or manually triggered.
2. Enter a **Name**.
3. Select the **Condition** that must be met to trigger the action. If you specify more than one condition for the rule, all of the conditions must be met to trigger the action.
4. Select which **Action** to perform when the conditions are met.

Detect motion with the thermal channel and zoom in and record with the visual channel

In difficult lighting conditions the thermal channel can detect objects that the visual sensor can't. This example explains how to use the thermal channel to detect motion, and then use the visual channel to zoom in and record. In the example, the camera monitors a gate.

Create a motion detection profile:

Note

If you run AXIS Motion Guard on both channels simultaneously, it can affect the frame rate and the general performance. Therefore, we recommend you to remove all AXIS Motion Guard profiles on the visual channel.

1. Go to **Apps** and open AXIS Video Motion Detection.
2. Select **Thermal**.
3. Create a profile named `Gate profile` that covers the area of interest. Find out more in the user manual for AXIS Motion Guard at *axis.com/products/online-manual/*.

Create the preset positions:

1. Go to **PTZ > Preset positions**.
   Both channels share the same preset configurations.
2. Create the home position that includes the area of interest.
3. Create a zoomed-in preset position, called `Gate position`, that covers the area in the image where you predict that the moving object will appear.

Create a rule to zoom in with the visual channel when the thermal channel detects motion:

1. Go to **System > Events** and add a rule.
2. Name the rule `Gatekeeper`.
3. In the list of conditions, under **Applications**, select **Motion Guard: Gate profile (Thermal)**.
4. In the list of actions, under **Preset positions**, select **Go to preset position**.
5. Under **Video channel**, select **Camera 1**.
6. Under **Preset position**, select **Gate position**.
7. Select **Home timeout** and set the duration for the camera to stay in the gate position (wait at least 30 seconds before returning to home position).
8. Click **Save**.

Create a rule to record video to the SD card:

1. Create a rule and name it `Record video`.
2. In the list of conditions, under **PTZ**, select **PTZ preset position reached: Camera 1**.
3. Under **Preset position**, select **Gate position**.
4. In the list of actions, under **Recordings**, select **Record video while the rule is active**.
5. Under **Camera**, select **Camera 1**.
6. Under **Storage**, select **SD card**.
7. Click **Save**.

Audio

Add audio to your recording

Turn on audio:

1. Go to **Video > Stream > Audio** and include audio.
2. If the device has more than one input source, select the correct one in **Source**.
3. Go to **Audio > Device settings** and turn on the correct input source.

Edit the stream profile that is used for the recording:

4. Go to **System > Stream profiles** and select the stream profile.
5. Select **Include audio** and turn it on.
6. Click **Save**.

Add audio capability to your product using portcast

With portcast technology, you can add audio capability to your product. It allows audio and I/O communication digitally over the network cable between the camera and the interface.

To add audio capability to your Axis network video device, connect the portcast compatible Axis audio device and I/O Interface between your device and the PoE switch which provides power.

1. Connect the Axis network video device (1) and the Axis portcast device (2) with a PoE cable.
2. Connect the Axis portcast device (2) and the PoE switch (3) with a PoE cable.

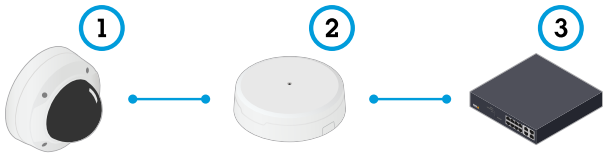

1 Axis network video device
2 Axis portcast device
3 Switch

Once the devices are connected, an audio tab becomes visible in the settings for your Axis network video device. Go to the audio tab and turn on **Allow audio**.

See your Axis portcast device's user manual for more information.

Set up washer

Note

The washer is optional.

1. Go to **System > Accessories > I/O Ports**.
2. For the port used with the washer — set **Output** as the direction.
3. Go to the live view and use the joystick (or mouse) to position the washer nozzle in the center of the image.
4. Go to **System > Accessories > Washer**.
5. Turn on **Lock nozzle position**.
6. Under **Pump connection**, select the pin (I/O port) the washer is connected to.
7. To set the duration of the washer sequence in seconds, enter a value under **Pump time**. The wiper starts when there is 5 seconds left of this time.
8. To set the duration of the wiper sequence in seconds, enter a value under **Wiper time**.

The below table provides some examples of different washer-wiper sequence setups.

Time elapsed (seconds)	Washer pump time: 10 s Washer wiper time: 10 s	Washer pump time: 20 s Washer wiper time: 12 s
0	Washer starts	Washer starts
10	Washer stops	—
20	—	Washer stops

The web interface

To read about all the features and settings available in the web interface of devices with AXIS OS, go to *AXIS OS web interface help*.

Learn more

Color palettes

To help the human eye distinguish details in a thermal image, you can apply a color palette to the image. The colors in the palette are artificially created pseudocolors that emphasize temperature differences.

Privacy masks

Note

Privacy masks are only available for the visual channel.

A privacy mask is a user-defined area that prevents users from viewing a part of the monitored area. In the video stream, privacy masks appear as blocks of solid color.

You'll see the privacy mask on all snapshots, recorded video, and live streams.

You can use the VAPIX® application programming interface (API) to hide the privacy masks.

Important

If you use multiple privacy masks it may affect the product's performance.

You can create several privacy masks. Each mask can have 3 to 10 anchor points.

Overlays

Overlays are superimposed over the video stream. They are used to provide extra information during recordings, such as a timestamp, or during product installation and configuration. You can add either text or an image.

Note

Overlays are included in all video streams except SIP calls when the connection is over PoE class 3.

Pan, tilt, and zoom (PTZ)

Guard tours

A guard tour displays the video stream from different preset positions either in a predetermined or random order, and for configurable periods of time. Once started, a guard tour continues to run until stopped, even when there are no clients (web browsers) viewing the images.

Streaming and storage

Video compression formats

Decide which compression method to use based on your viewing requirements, and on the properties of your network. The available options are:

Motion JPEG

Motion JPEG, or MJPEG, is a digital video sequence that is made up of a series of individual JPEG images. These images are then displayed and updated at a rate sufficient to create a stream that shows constantly updated motion. For the viewer to perceive motion video the rate must be at least 16 image frames per second. Full motion video is perceived at 30 (NTSC) or 25 (PAL) frames per second.

The Motion JPEG stream uses considerable amounts of bandwidth, but provides excellent image quality and access to every image contained in the stream.

H.264 or MPEG-4 Part 10/AVC

Note

H.264 is a licensed technology. The Axis product includes one H.264 viewing client license. To install additional unlicensed copies of the client is prohibited. To purchase additional licenses, contact your Axis reseller.

H.264 can, without compromising image quality, reduce the size of a digital video file by more than 80% compared to the Motion JPEG format and by as much as 50% compared to older MPEG formats. This means that less network bandwidth and storage space are required for a video file. Or seen another way, higher video quality can be achieved for a given bitrate.

H.265 or MPEG-H Part 2/HEVC

H.265 can, without compromising image quality, reduce the size of a digital video file by more than 25% compared to H.264.

Note

- H.265 is licensed technology. The Axis product includes one H.265 viewing client license. Installing additional unlicensed copies of the client is prohibited. To purchase additional licenses, contact your Axis reseller.
- Most web browsers don't support H.265 decoding and because of this the camera doesn't support it in its web interface. Instead you can use a video management system or application supporting H.265 decoding.

How do Image, Stream, and Stream profile settings relate to each other?

The **Image** tab contains camera settings that affect all video streams from the product. If you change something in this tab, it immediately affects all video streams and recordings.

The **Stream** tab contains settings for video streams. You get these settings if you request a video stream from the product and don't specify for example resolution, or frame rate. When you change the settings in the **Stream** tab, it doesn't affect ongoing streams, but it will take effect when you start a new stream.

The **Stream profiles** settings override the settings from the **Stream** tab. If you request a stream with a specific stream profile, the stream contains the settings of that profile. If you request a stream without specifying a stream profile, or request a stream profile that doesn't exist in the product, the stream contains the settings from the **Stream** tab.

Bitrate control

Bitrate control helps you to manage the bandwidth consumption of your video stream.

Variable bitrate (VBR)
Variable bitrate allows the bandwidth consumption to vary depending on the level of activity in the scene. The more activity, the more bandwidth you need. With variable bitrate you are guaranteed constant image quality, but you need to make sure you have storage margins.

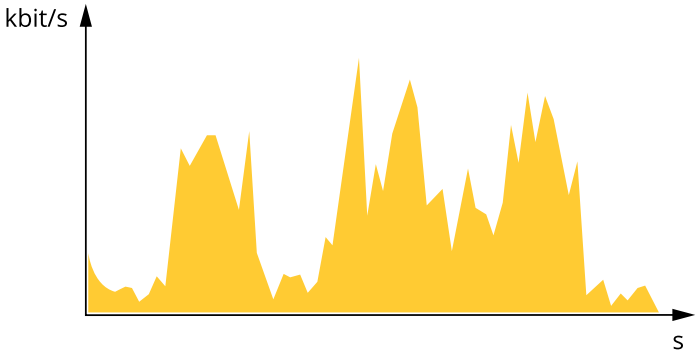

Maximum bitrate (MBR)
Maximum bitrate lets you set a target bitrate to handle bitrate limitations in your system. You might see a decline in image quality or frame rate as the instantaneous bitrate is kept below the specified target bitrate. You

can choose to prioritize either image quality or frame rate. We recommend that you configure the target bitrate to a higher value than the expected bitrate. This gives you a margin in case there is a high level of activity in the scene.

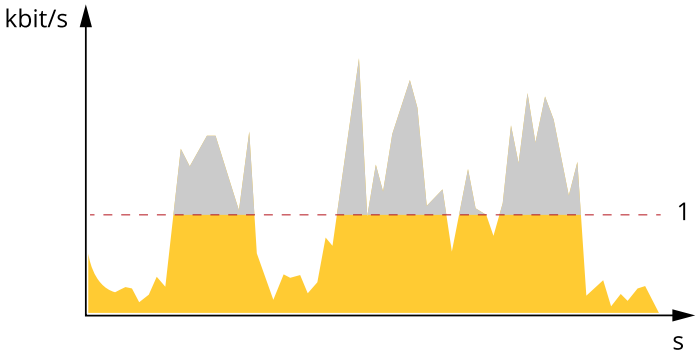

1 Target bitrate

Average bitrate (ABR)

With average bitrate, the bitrate is automatically adjusted over a longer period of time. This is so you can meet the specified target and provide the best video quality based on your available storage. Bitrate is higher in scenes with a lot of activity, compared to static scenes. You are more likely to get better image quality when in scenes with a lot of activity if you use the average bitrate option. You can define the total storage required to store the video stream for a specified amount of time (retention time) when image quality is adjusted to meet the specified target bitrate. Specify the average bitrate settings in one of the following ways:

- To calculate the estimated storage need, set the target bitrate and the retention time.
- To calculate the average bitrate, based on available storage and required retention time, use the target bitrate calculator.

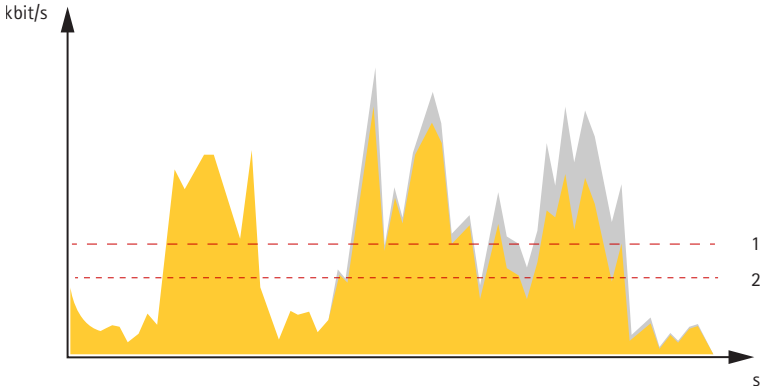

1 Target bitrate
2 Actual average bitrate

You can also turn on maximum bitrate and specify a target bitrate within the average bitrate option.

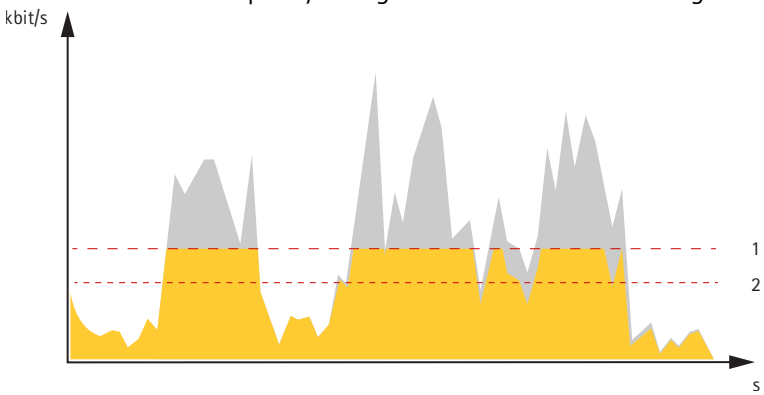

1 Target bitrate
2 Actual average bitrate

Analytics and apps

With analytics and apps you can get more out of your Axis device. AXIS Camera Application Platform (ACAP) is an open platform that makes it possible for third parties to develop analytics and other apps for Axis devices. Apps can be preinstalled on the device, available for download for free, or for a license fee.

To find the user manuals for Axis analytics and apps, go to *help.axis.com*.

Specifications

Product overview

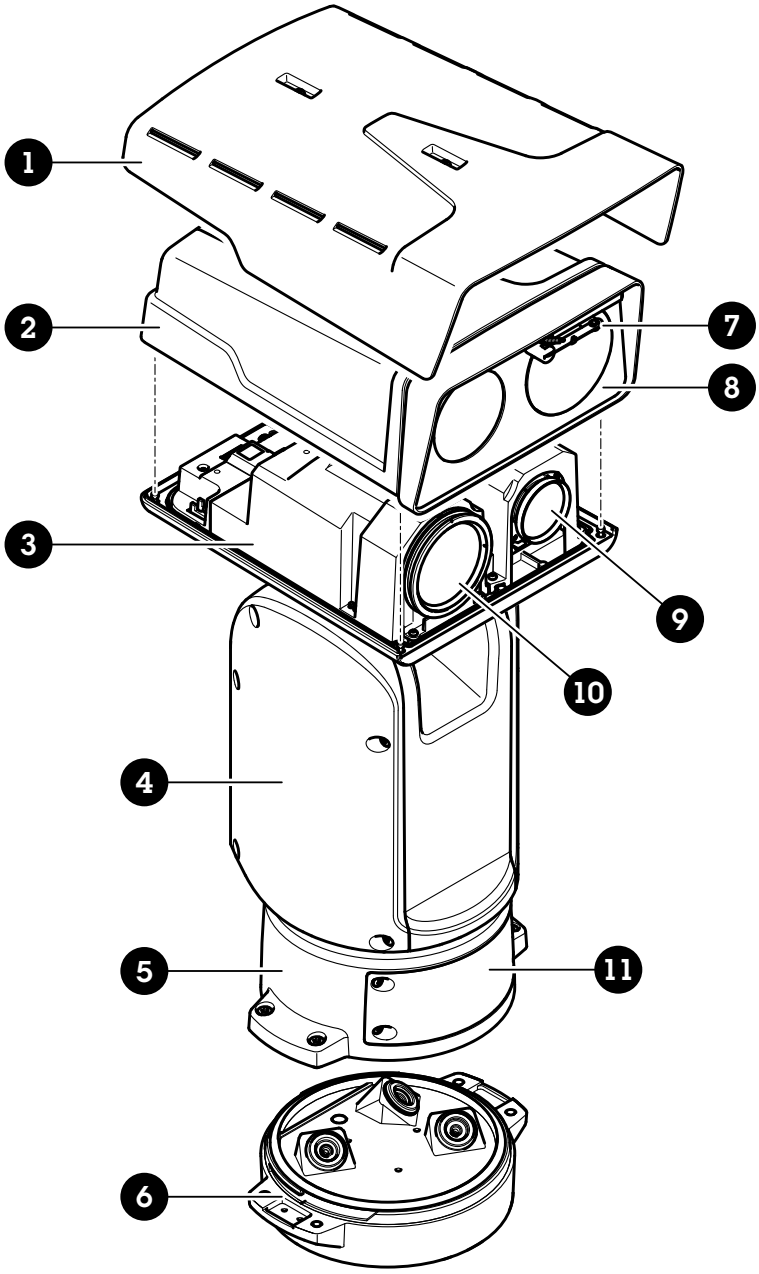

1 *Weathershield*
2 *Top cover*
3 *Inner cover*
4 *Positioning unit*
5 *Base unit screws*
6 *Base unit*
7 *Wiper*
8 *Front with protective foil*
9 *Visual lens*
10 *Thermal lens*
11 *Lid*

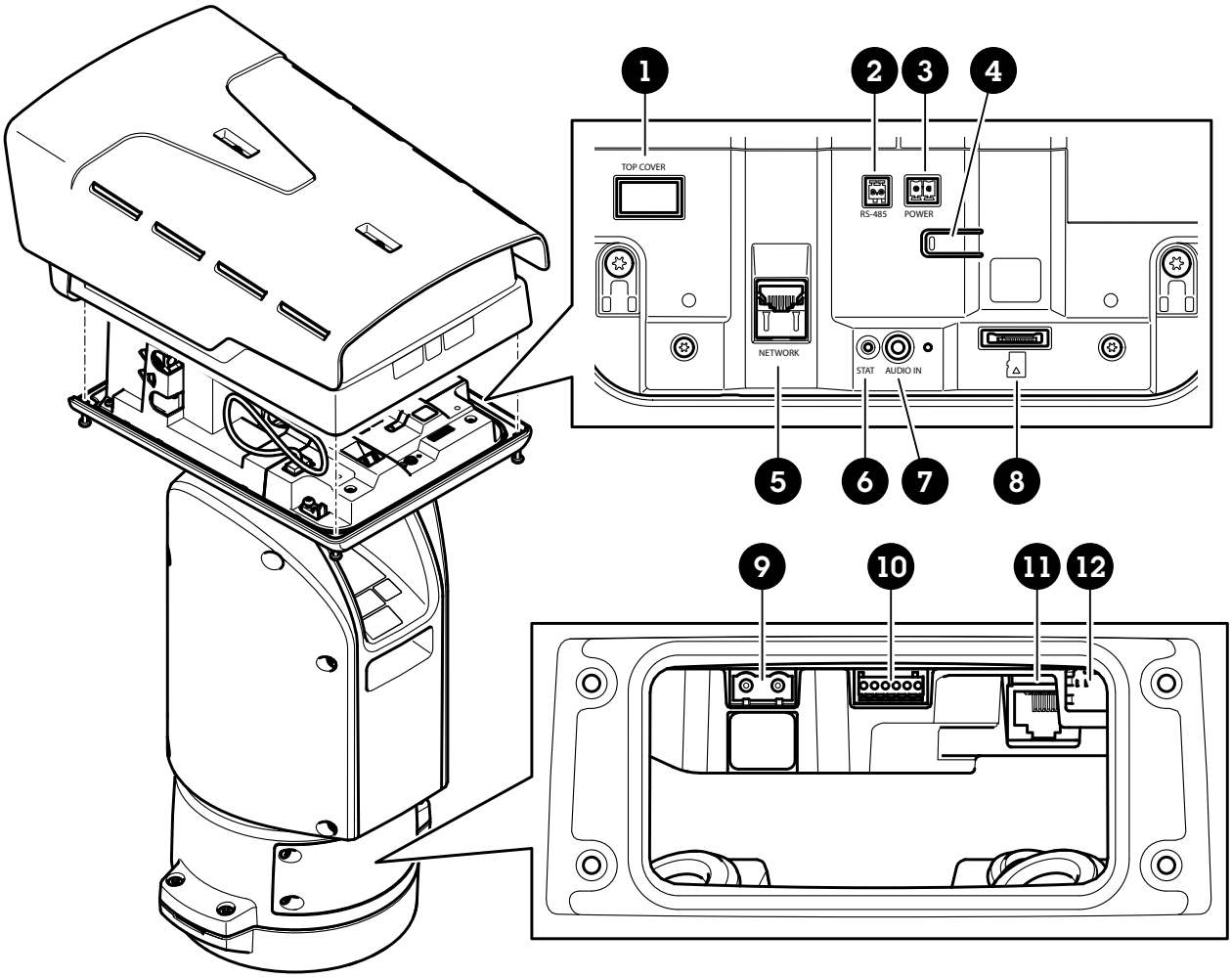

1 *Top cover connector*
2 *RS485 connector*
3 *Power connector*
4 *Control button*
5 *RJ45 connector*
6 *Status LED*
7 *Audio in 3.5 mm connector*
8 *SD card slot (microSD, card not included)*
9 *Input power connector*
10 *I/O connector*
11 *RJ45 connector*
12 *SFP slot for SFP module (not included)*

LED indicators

Status LED	Indication
Unlit	Normal operation
Green	Steady during startup
Amber	Steady during startup. Flashes during firmware upgrade or reset to factory default.
Amber/Red	Flashes amber/red if network connection is unavailable or lost.
Red	Firmware upgrade failure.

SD card slot

CAUTION

Moving parts. Risk of injury. Keep your body parts away from the product when it's in operation. Disconnect from power supply before installing or performing maintenance on the product.

CAUTION

Hot surface. Risk of injury. Don't touch the product when it's in operation. Disconnect from power supply and allow the surfaces to cool before performing maintenance on the product.

NOTICE

- Risk of damage to SD card. Don't use sharp tools, metal objects, or excessive force when inserting or removing the SD card. Use your fingers to insert and remove the card.
- Risk of data loss and corrupted recordings. Unmount the SD card from the device's web interface before removing it. Don't remove the SD card while the product is running.

This device supports microSD/microSDHC/microSDXC cards.

For SD card recommendations, see *axis.com*.

microSD, microSDHC, and microSDXC Logos are trademarks of SD-3C LLC. microSD, microSDHC, microSDXC are trademarks or registered trademarks of SD-3C, LLC in the United States, other countries or both.

Insert an SD card

You can use an SD card to store recordings locally in the device. The SD card is not included.

CAUTION

- Risk of injury. Moving parts. Keep your body parts away from the device when in operation. Disconnect from power supply before installing or performing maintenance on the device.
- Risk of injury. Hot surface. Do not touch the device when in operation. Disconnect from power supply and allow the surfaces to cool before performing maintenance on the device.

NOTICE

When you remove the top cover you expose parts of the camera that are sensitive to impact. Make sure you don't hit the unprotected camera with the top cover when you remove it.

To insert an SD card in the device:

1. Disconnect power from the device.

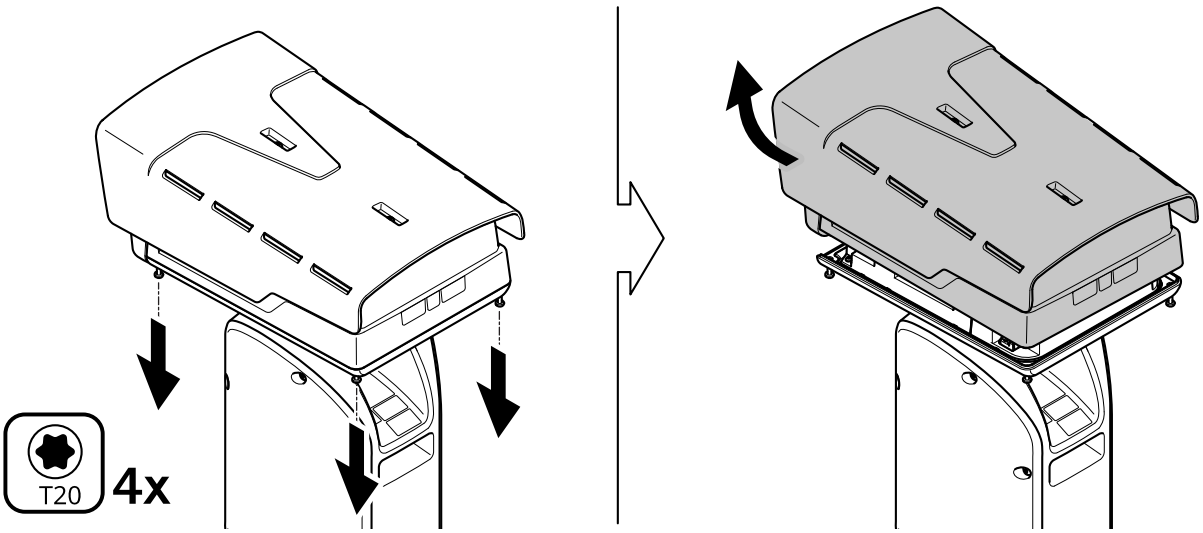

2. Loosen the four top cover screws and remove the top cover.
3. Insert the SD card. To find out where the SD card slot is placed, see *Product overview, on page 21*.

4. Put back the top cover and tighten the screws (torque 2.0 Nm).
5. Reconnect power to the device.

Buttons

Control button

The control button is used for:

- Resetting the product to factory default settings. See *Reset to factory default settings, on page 29*.

Connectors

Network connector

RJ45 Ethernet connector.

SFP connector.

Power connector

2-pin terminal block for DC power input. Use a Safety Extra Low Voltage (SELV) compliant limited power source (LPS) with either a rated output power limited to ≤100 W or a rated output current limited to ≤5 A.

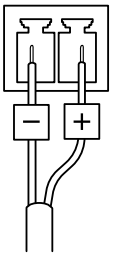

Audio connector

- **Audio in** – 3.5 mm input for a mono microphone, or a line-in mono signal (left channel is used from a stereo signal).
- **Audio in** – 3.5 mm input for a digital microphone, an analog mono microphone, or a line-in mono signal (left channel is used from a stereo signal).

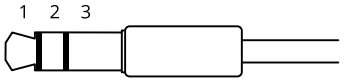

Audio input

1 Tip	2 Ring	3 Sleeve
Balanced microphone (with or without phantom power) or line-in, "hot" signal	Balanced microphone (with or without phantom power) or line-in, "cold" signal	Ground
Digital signal	Ring power if selected	Ground

I/O connector

Use the I/O connector with external devices in combination with, for example, motion detection, event triggering, and alarm notifications. In addition to the 0 VDC reference point and power (12 V DC output), the I/O connector provides the interface to:

Digital input – For connecting devices that can toggle between an open and closed circuit, for example PIR sensors, door/window contacts, and glass break detectors.

Digital output – For connecting external devices such as relays and LEDs. Connected devices can be activated by the VAPIX® Application Programming Interface, through an event or from the device's web interface.

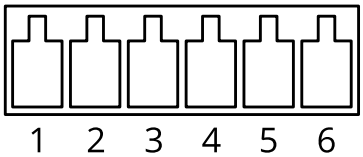

Function	Pin	Notes	Specifications
DC ground	1		0 VDC
DC output	2	Can be used to power auxiliary equipment. Note: This pin can only be used as power out.	12 VDC Max load = 50 mA
Configurable (Input or Output)	3–6	Digital input – Connect to pin 1 to activate, or leave floating (unconnected) to deactivate.	0 to max 30 VDC
		Digital output – Internally connected to pin 1 (DC ground) when active, and floating (unconnected) when inactive. If used with an inductive load, e.g., a relay, connect a diode in parallel with the load, to protect against voltage transients.	0 to max 30 VDC, open drain, 100 mA

Example:

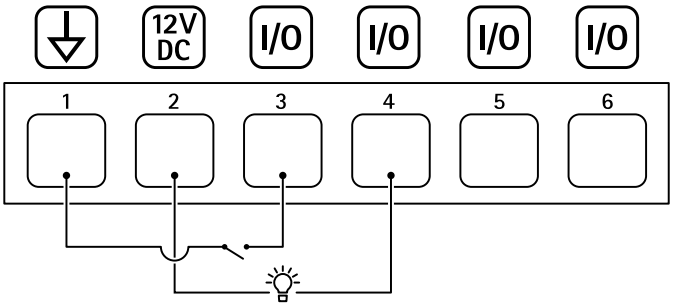

1 *DC ground*
2 *DC output 12 V, max 50 mA*
3 *I/O configured as input*
4 *I/O configured as output*
5 *Configurable I/O*
6 *Configurable I/O*

Input power connector

2-pin terminal block for DC power input. Use a 52-58 V DC power source with a maximum power consumption of 150 W.

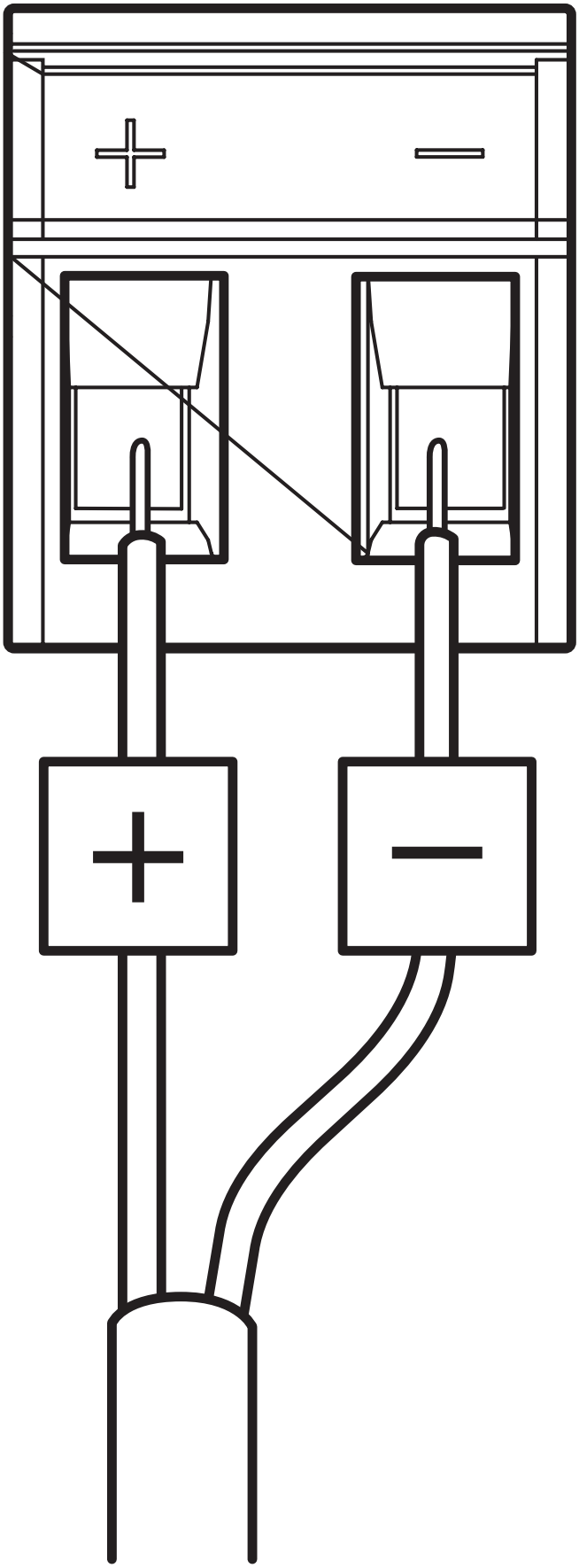

Illuminator connectors

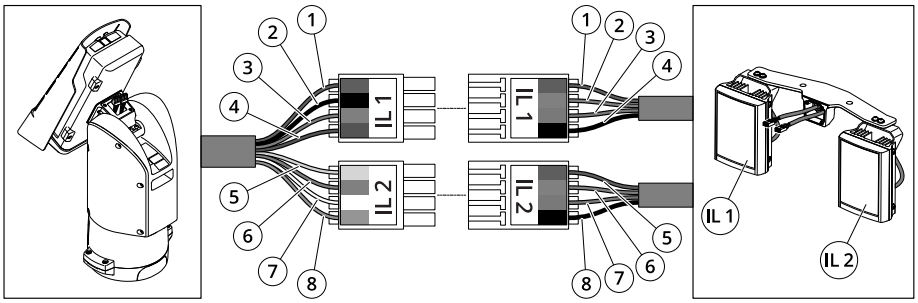

	Position	Cable color (positioning unit)	Cable color (illuminators)	Description
IL1	1	Red	Red	+24V IL
	2	Black	Orange	IL1 +VE
	3	Gray	Purple	IL1 -VE
	4	Blue	Black	GND
IL2	5	Yellow	Red	+24V IL
	6	Orange	Orange	IL2 +VE
	7	White	Purple	IL2 -VE
	8	Green	Black	GND

Clean your device

You can clean your device with lukewarm water.

NOTICE

- Harsh chemicals can damage the device. Don't use chemicals such as window cleaner or acetone to clean your device.
- Avoid cleaning in direct sunlight or elevated temperatures, since this can cause stains.

1. Use a can of compressed air to remove dust and loose dirt from the device.
2. If necessary, clean the device with a soft microfiber cloth dampened with lukewarm water.
3. To avoid stains, dry the device with a clean, nonabrasive cloth.

For more information about cleaning of Axis devices, see the white paper *Chemical resistance to common cleaning agents*.

Troubleshooting

Reset to factory default settings

CAUTION

- Risk of injury. Moving parts. Keep your body parts away from the product when in operation. Disconnect from power supply before installing or performing maintenance on the product.
- Risk of injury. Hot surface. Do not touch the product when in operation. Disconnect from power supply and allow the surfaces to cool before performing maintenance on the product.

NOTICE

When you remove the top cover you expose parts of the visual camera that are sensitive to impact. Make sure you don't hit the unprotected camera with the top cover when you remove it.

Important

Reset to factory default should be used with caution. A reset to factory default resets all settings, including the IP address, to the factory default values.

Note

The installation and management software tools are available from the support pages at *axis.com/support/downloads*

1. Disconnect power from the product.

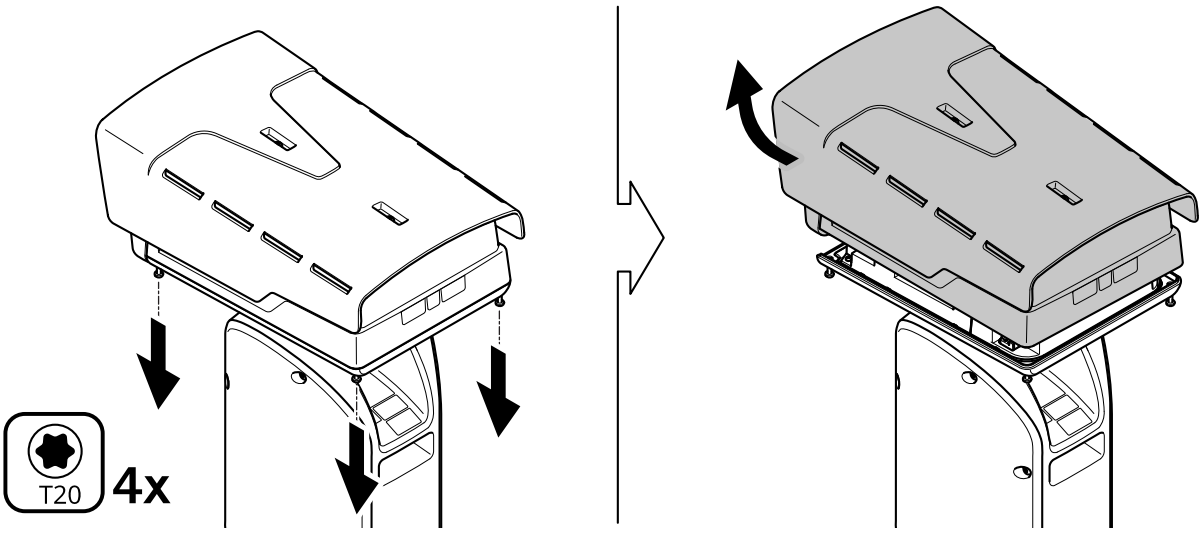

2. Loosen the four top cover screws and remove the top cover.
3. Press the control button. To find out where the control button is placed, see *Product overview, on page 21*
4. Put back the top cover and tighten the screws (torque 2.0 Nm).
5. Reconnect power to the product.

You can also reset to factory default through the product's web page. Go to **Settings > System > Maintenance** and click **Default**.

AXIS OS options

Axis offers device software management according to either the active track or the long-term support (LTS) tracks. Being on the active track means continuously getting access to all the latest product features, while the LTS tracks provide a fixed platform with periodic releases focused mainly on bug fixes and security updates.

Using AXIS OS from the active track is recommended if you want to access the newest features, or if you use Axis end-to-end system offerings. The LTS tracks are recommended if you use third-party integrations, which are not continuously validated against the latest active track. With LTS, the products can maintain cybersecurity

without introducing any significant functional changes or affecting any existing integrations. For more detailed information about Axis device software strategy, go to *axis.com/support/device-software*.

Check the current AXIS OS version

AXIS OS determines the functionality of our devices. When you troubleshoot a problem, we recommend that you to start by checking the current AXIS OS version. The latest version might contain a correction that fixes your particular problem.

To check the current AXIS OS version:

1. Go to the device's web interface > **Status**.
2. Under **Device info**, see the AXIS OS version.

Upgrade AXIS OS

Important

- When you upgrade the device software, your preconfigured and customized settings are saved. Axis Communications AB can't guarantee that the settings are saved, even if the features are available in the new AXIS OS version.
- Starting from AXIS OS 12.6, you must install every LTS version between your device's current version and the target version. For example, if the currently installed device software version is AXIS OS 11.2, you have to install the LTS version AXIS OS 11.11 before you can upgrade the device to AXIS OS 12.6. For more information, see *AXIS OS Lifecycle guide: Upgrade path*.
- Make sure the device remains connected to the power source throughout the upgrade process.

Note

- When you upgrade the device with the latest AXIS OS version in the active track, the product receives the latest functionality available. Always read the upgrade instructions and release notes available with each new release before you upgrade. To find the latest AXIS OS version and the release notes, go to *axis.com/support/device-software*.

1. Download the AXIS OS file to your computer, available free of charge at *axis.com/support/device-software*.
2. Log in to the device as an administrator.
3. Go to **Maintenance > AXIS OS upgrade** and click **Upgrade**.

When the upgrade has finished, the product restarts automatically.

Technical problems and possible solutions

Problems upgrading AXIS OS

AXIS OS upgrade failed

If the upgrade fails, the device reloads the previous version. The most common reason is that the wrong AXIS OS file has been uploaded. Check that the name of the AXIS OS file corresponds to your device and try again.

Problems after AXIS OS upgrade

If you experience problems after the upgrade, roll back to the previously installed version from the **Maintenance** page.

Problems setting the IP address

Can't set the IP address

- If the IP address intended for the device and the IP address of the computer used to access the device are located on different subnets, you can't set the IP address. Contact your network administrator to obtain an IP address.
- The IP address could be in use by another device. To check:
  1. Disconnect the Axis device from the network.
  2. In a Command/DOS window, type `ping` and the IP address of the device.
  3. If you receive: `Reply from <IP address>: bytes=32; time=10...` this means that the IP address might already be in use by another device on the network. Obtain a new IP address from the network administrator and reinstall the device.
  4. If you receive: `Request timed out`, this means that the IP address is available for use with the Axis device. Check all cabling and reinstall the device.
- There could be a possible IP address conflict with another device on the same subnet. The static IP address in the Axis device is used before the DHCP server sets a dynamic address. This means that if the same default static IP address is also used by another device, there could be problems accessing the device.

Problems accessing the device

Can't log in when accessing the device from a browser

When HTTPS is enabled, make sure that you use the correct protocol (HTTP or HTTPS) when you try to log in. You might need to manually type `http` or `https` in the browser's address field.

If you've lost the password for the root account, you must reset the device to the factory default settings. For instructions, see *Reset to factory default settings, on page 29*.

The IP address has been changed by DHCP

IP addresses obtained from a DHCP server are dynamic and could change. If the IP address has been changed, use AXIS IP Utility or AXIS Device Manager to locate the device on the network. Identify the device using its model or serial number, or by the DNS name (if the name has been configured).

If required, you can assign a static IP address manually. For instructions, go to *axis.com/support*.

Certificate error when using IEEE 802.1X

For authentication to work properly, the date and time settings in the Axis device must be synchronized with an NTP server. Go to **System > Date and time**.

The browser isn't supported

For a list of recommended browsers, see *Browser support, on page 5*.

Can't access the device externally

To access the device externally, we recommend you to use one of the following applications for Windows®:

- AXIS Camera Station Edge: free of charge, ideal for small systems with basic surveillance needs.
- AXIS Camera Station Pro: 90-day trial version free of charge, ideal for small to mid-size systems.

For instructions and download, go to *axis.com/vms*.

Problems with MQTT

Can't connect over port 8883 with MQTT over SSL

The firewall blocks traffic that uses port 8883 since it's regarded insecure.

In some cases the server/broker might not provide a specific port for MQTT communication. It might still be possible to use MQTT over a port normally used for HTTP/HTTPS traffic.

- If the server/broker supports WebSocket/WebSocket Secure (WS/WSS), typically on port 443, use this protocol instead. Check with the server/broker provider to see if WS/WSS is supported and which port and basepath to use.
- If the server/broker supports ALPN, the use of MQTT can be negotiated over an open port, such as 443. Check with your server/broker provider to see if ALPN is supported and which ALPN protocol and port to use.

Problems with operating the device

Front heater and wiper aren't working

If the front heater or wiper are not turning on, confirm that the top cover is properly fastened to the bottom of the housing unit.

If you can't find what you're looking for here, try the troubleshooting section at *axis.com/support*.

Performance considerations

When you set up your system, it's important to consider how different settings and situations affect performance. Some factors affect bandwidth (bitrate), others affect frame rate, and some affect both.

The most important factors to consider:

- High image resolution or lower compression levels result in images containing more data which in turn affects the bandwidth.
- Rotating the image in the GUI can increase the product's CPU load.
- Access by large numbers of Motion JPEG clients or unicast H.264/H.265/AV1 clients affects the bandwidth.
- Simultaneous viewing of different streams (resolution, compression) by different clients affects both frame rate and bandwidth.
  Use identical streams wherever possible to maintain a high frame rate. Stream profiles can be used to ensure that streams are identical.
- Accessing video streams with different codecs simultaneously affects both frame rate and bandwidth. For optimal performance, use streams with the same codec.
- Heavy usage of event settings affects the product's CPU load which in turn affects the frame rate.
- Using HTTPS may reduce frame rate, in particular if streaming Motion JPEG.
- Heavy network utilization due to poor infrastructure affects the bandwidth.
- Viewing on poorly performing client computers lowers perceived performance and affects frame rate.
- Running multiple AXIS Camera Application Platform (ACAP) applications simultaneously may affect the frame rate and the general performance.
- Running multiple AXIS Camera Application Platform (ACAP) applications on the Visual and Thermal channels simultaneously may affect the frame rate and the general performance.

Contact support

If you need more help, go to *axis.com/support*.

Cybersecurity

Cybersecurity supports a successful product lifecycle with minimized risks. You can find in-depth information and documentation about our cybersecurity approach at *axis.com/about-axis/cybersecurity*. Follow the cybersecurity guidelines below to receive product security notifications from Axis and to configure your product for a secure lifecycle and decommissioning.

At *Axis Trust Center*, you can find information about how Axis implements security compliance, transparency, data protection, and privacy.

Vulnerability management

Axis is a *Common Vulnerability and Exposures (CVE) Numbering Authority (CNA)*. To minimize your risk of exposure, we follow industry standards when identifying and resolving vulnerabilities in our devices, software, and services. Refer to *axis.com/vulnerability-management* for information about our vulnerability management policy or to report a vulnerability.

Security notifications

Subscribe to Axis security notification emails at *axis.com/security-notification-service*. We will send you information about vulnerabilities, corresponding security advisories, and other security-related matters for your Axis product.

Secure product lifecycle

Axis minimizes risks throughout the lifetime of our products through secure lifecycle management. Use our hardening guides at *help.axis.com* to more securely configure and operate your Axis products and to find information about:

Secure first-use – Axis products are pre-configured with high default protection to allow for secure initialization and encrypted communication from the very start.

Intended use and common configuration mistakes – Our guides provide information about the intended usage of Axis products, including common security-relevant misuse and configuration mistakes that should be avoided.

Managing vulnerabilities and supply chain transparency – A Software Bill of Material (SBOM) is published with every software release on *axis.com* to disclose vulnerabilities and improve supply chain transparency.

Decommissioning and the secure erasure of data – To securely decommission a product when it reaches the end of its lifecycle, reset it to factory default settings. This erases your configurations, stored data, and sensitive information.

T10223467

2026-07 (M10.4)

© 2025 – 2026 Axis Communications AB