# Modular Alarm Platform 5000

ICP-MAP5000-2 | ICP-MAP5000-COM | ICP-MAP5000-S | ICP-MAP5000-SC | ICP-MAP5000-3 | ICP-MAP5000-COM/3 | ICP-MAP5000-S/3 | ICP-MAP5000-SC/3

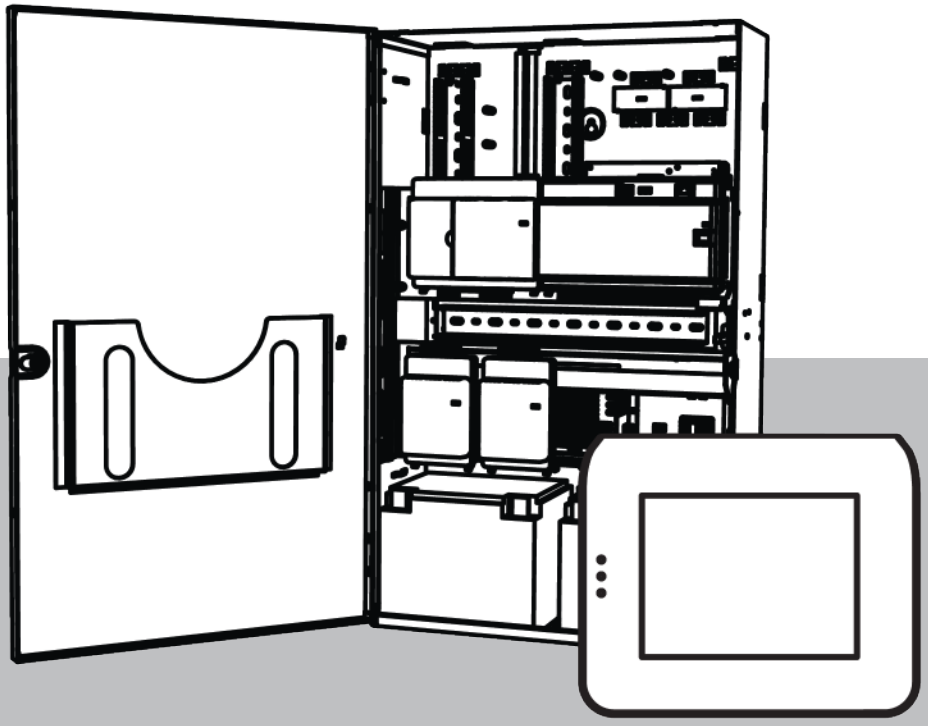

**en** Installation manual

# Table of contents


| | | |
|---|---|---|
| **1** | **Safety** | **5** |
| **2** | **Introduction** | **6** |
| 2.1 | Short information | 6 |
| 2.2 | Battery handling | 6 |
| 2.3 | Installation considerations | 6 |
| 2.4 | Planning the system | 7 |
| 2.4.1 | Planning the system with power supply | 8 |
| 2.4.2 | Planning the system with BDB/CAN splitter | 12 |
| 2.5 | System overview | 13 |
| **3** | **Installation** | **18** |
| 3.1 | Removing the enclosure knockouts | 18 |
| 3.2 | Installing the tamper switch rail | 19 |
| 3.3 | Mounting the enclosure | 21 |
| 3.3.1 | MAP panel enclosure | 21 |
| 3.3.2 | MAP power enclosure | 23 |
| 3.3.3 | MAP expansion enclosure | 24 |
| 3.4 | Checking the AC connection | 25 |
| 3.5 | Installing the power supply | 25 |
| 3.6 | Installing the AC terminal block | 27 |
| 3.7 | Installing the thermistor cable | 27 |
| 3.8 | Installing the TAE box | 28 |
| 3.9 | Installing the accessory mounting plate | 29 |
| 3.10 | Installing the power converter | 31 |
| 3.11 | Installing the SIV 28 fuse plate | 31 |
| 3.12 | Installing the AT x000 communicator | 32 |
| 3.13 | Installing the hinged mounting plate | 35 |
| 3.13.1 | Mounting the modules onto the hinged mounting plate | 36 |
| 3.13.2 | Mounting the MAP5000 panel on the hinged mounting plate | 39 |
| 3.13.3 | Mounting the Ethernet cable | 39 |
| 3.14 | Installing the relay module | 39 |
| 3.15 | Installing and connecting the supported GSM modem | 40 |
| 3.16 | Antennas | 42 |
| **4** | **Connections** | **44** |
| 4.1 | Connecting the Bosch Data Bus | 44 |
| 4.1.1 | Internal / external Bosch Data Bus | 46 |
| 4.1.2 | Topology of the external Bosch Data Bus | 47 |
| 4.2 | Connecting the power supply | 47 |
| 4.2.1 | Power supply connections | 47 |
| 4.2.2 | Optional power supply connections | 48 |
| 4.3 | Connecting the MAP5000 panel | 49 |
| 4.4 | Connecting DE module | 50 |
| 4.5 | Connecting the LSN gateway | 51 |
| 4.6 | Splitting the external BDB with a BDB/CAN splitter | 53 |
| 4.7 | Connecting the touch keypad | 54 |
| 4.8 | Installing the touch keypad | 55 |
| 4.9 | Installing and connecting the tamper switch | 56 |
| 4.10 | Installing the ICP-MAP0060 MAP enclosure lockset | 59 |
| 4.11 | Final power connections | 60 |

| | | |
|---|---|---|
| 4.12 | IP Interface | 61 |
| **5** | **Initial set-up** | **63** |
| **6** | **Programming** | **64** |
| 6.1 | RPS for MAP | 64 |
| 6.1.1 | Help for the RPS for MAP | 64 |
| 6.1.2 | Standard-compliant programming | 64 |
| 6.2 | System bundle | 65 |
| 6.2.1 | Checking the firmware version | 65 |
| 6.2.2 | Firmware updates | 65 |
| 6.2.3 | Manufacturer authorization | 65 |
| 6.3 | Completing the installation | 65 |
| 6.4 | Point types and point evaluation | 66 |
| 6.5 | Output functions | 66 |
| 6.5.1 | Programmable output signals | 66 |
| 6.5.2 | Sirens and communicator in accordance with EN50131 grade 3 | 69 |
| **7** | **Maintenance and service** | **71** |
| 7.1 | General information | 71 |
| 7.2 | Installer button | 71 |
| **8** | **Technical Specifications** | **73** |
| **9** | **Appendices** | **76** |
| 9.1 | Requirements in accordance with VdS class C | 76 |
| 9.1.1 | Selecting the default setting | 76 |
| 9.1.2 | Power supply for areas | 76 |
| 9.1.3 | Touch keypads | 76 |
| 9.1.4 | Connection to a management system | 76 |
| 9.1.5 | Printer connection | 76 |
| 9.1.6 | Access levels | 76 |
| 9.1.7 | Connection of an LSN fire detector as a technical detector | 79 |
| 9.2 | Requirements in accordance with EN 50131 grade 3 | 79 |
| 9.2.1 | Selecting the default setting | 79 |
| 9.2.2 | Connectable peripherals | 79 |
| 9.2.3 | Arming / disarming without entry / exit delay | 79 |
| 9.2.4 | Arming / disarming with entry / exit delay | 80 |
| 9.2.5 | Forced Arming with automatic bypass | 81 |
| 9.2.6 | Automatic arming / disarming | 81 |
| 9.2.7 | Alarm output via siren and communicator | 82 |
| 9.2.8 | Connection to a management system | 83 |
| 9.2.9 | Printer connection | 83 |
| 9.2.10 | Access levels | 83 |
| 9.2.11 | Additional functions | 85 |
| 9.3 | Requirements in accordance with SES | 86 |
| 9.3.1 | Selecting the default setting | 86 |
| 9.3.2 | Automatic arming / disarming | 86 |
| 9.3.3 | Custom point type duress alarm | 87 |
| 9.3.4 | Areas with blocking time | 87 |
| 9.3.5 | Access Levels | 87 |
| 9.3.6 | Tamper surveillance | 90 |
| 9.4 | Alarm reporting | 91 |
| 9.5 | History log | 92 |

# 1 Safety

**Use latest software**

Before operating the device for the first time, make sure that you install the latest applicable release of your software version. For consistent functionality, compatibility, performance, and security, regularly update the software throughout the operational life of the device. Follow the instructions in the product documentation regarding software updates.

The following links provide more information:

- General information: https://www.boschsecurity.com/xc/en/support/product-security/
- Security advisories, that is a list of identified vulnerabilities and proposed solutions: https://www.boschsecurity.com/xc/en/support/product-security/security-advisories.html

Bosch assumes no liability whatsoever for any damage caused by operating its products with outdated software components.

**Decommissioning**

When the system is at the end of service life, remove the connected products from the system and disassemble the system.

When permanently removing software from servers and workstations, make sure that the removal includes all personally identifiable and sensitive data, such as stored certificates and credentials.

Examples of sensitive or confidential data are:

- Personal data (audio and video data, chats, name, first name, birth date)
- Personally identifiable information (car license plate numbers, IT-shortcuts, customer numbers)
- Certificates or credentials

During decommissioning or before disposal, use the proper tools and methods to remove all relevant data completely and securely.

As a recommended best practice, set servers and workstations back to factory default when reused in other installations.

**Disposal**

For ensuring a secure disposal, please consider fulfilment of the DIN 66399 respective ISO/IEC 21964 part 1 and part 3.

**Old electrical and electronic equipment**

| | |
|---|---|
| 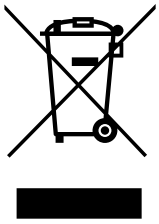 | This product and/or battery must be disposed of separately from household waste. Dispose such equipment according to local laws and regulations, to allow their reuse and/or recycling. This will help in conserving resources, and in protecting human health and the environment. |

# 2 Introduction

## 2.1 Short information

This manual describes the installation, wiring, initial set-up and maintenance of the MAP5000 system.
It is applicable for all MAP5000 kits and the following MAP5000 panels including all MAP accessory products:

- MAP5000 panel (ICP-MAP5000-2 | ICP-MAP5000-3)
- MAP5000 panel com (ICP-MAP5000-COM | ICP-MAP5000-COM/3) including supported GSM module.
- MAP5000 panel small (ICP-MAP5000-S | ICP-MAP5000-S/3)
- MAP5000 panel small com (ICP-MAP5000-SC | ICP-MAP5000-SC/3) including supported GSM module.

## 2.2 Battery handling

The battery terminals must be covered after installation in order to avoid short circuits. Suitable terminal covers are included in the scope of delivery of the power supply.

**Danger!**
Electrictity
Do not short-circuit the battery in the host alarm system. A short-circuited battery can deliver large currents that might result in serious burns or create a fire hazard.

**Old electrical and electronic equipment**

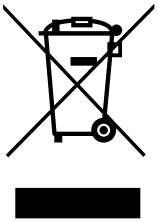

This product and/or battery must be disposed of separately from household waste. Dispose such equipment according to local laws and regulations, to allow their reuse and/or recycling. This will help in conserving resources, and in protecting human health and the environment.

Further information is available at http://www.boschsecurity.com/standards.

## 2.3 Installation considerations

- When installing this MAP5000 system, ensure that all local and national wiring codes are met.
- Only authorized service personnel is allowed to install this MAP5000 system.
- Use only the installation material recommended by BOSCH Security Systems to ensure error-free operation.
- Follow anti-static procedures when handling system components. Ensure that you are properly grounded to discharge any static charge before you work with system components.
- Install all components in dry, maintained interior rooms.
- Install the MAP5000 system in a centrally located room that is near the AC mains power.
- Because the MAP5000 panel is permanently connected equipment, a readily accessible disconnect device must be included into the building installation wiring.

**Danger!**
Electric shock
Danger of electric shock if live parts are touched. The intrusion alarm system is designed for an IT-power distribution system (230 V). Switch off the power supply of the intrusion alarm system before carrying out maintenance or installation work.

## 2.4 Planning the system

**MAP panel enclosure**
The ICP-MAP0111 MAP panel enclosure is the main system enclosure. This enclosure is designed to contain the following components:
- MAP5000 panel[1]
- ICP-MAP0007-2 MAP DE interface module[1]
- ICP-MAP0010 MAP LSN gateway[1]
- ICP-MAP0012 MAP BDB/CAN splitter[1]
- AT x000 communicator[2]
- IPP-MAP0005-2 MAP power supply 150W[3]
- ICP-MAP0065 MAP terminal block[4]
- ICP-MAP0050 MAP panel/power enclosure tamper switch
- Two batteries (maximum 45 Ah each)

Use the ICP-MAP0120 MAP expansion enclosure when the system requirements for power and / or other remote devices exceed the capacity provided by the ICP-MAP0111 MAP panel enclosure[6].

**MAP expansion enclosure**
The ICP-MAP0120 expansion enclosure kit is designed to contain the following components:
- IPP-MAP0005-2 MAP power supply 150W[3]
- ICP-MAP0010 MAP LSN gateway[5]
- ICP-MAP0012 MAP BDB/CAN splitter[1]
- ICP-MAP0065 MAP terminal block[4]
- ICP-MAP0055 MAP expansion enclosure tamper switch
- Two batteries (maximum 18 Ah each)

Use the ICP-MAP0115 MAP power enclosure when system power requirements exceed the power capacity of the ICP-MAP0111 MAP panel enclosure[6].

**MAP power enclosure**
The ICP-MAP0115 MAP power enclosure is designed to contain the following components:
- IPP-MAP0005-2 MAP power supply 150W[3]
- ICP-MAP0065 MAP terminal block[4]
- ICP-MAP0050 MAP panel/power enclosure tamper switch
- Four batteries (maximum 40 Ah each)

[1] This module mounts on the ICP-MAP0025 MAP hinged mounting plate.
[2] This module mounts on the ICP-MAP0020 MAP accessory mounting plate, which mounts to the back of the enclosure.
[3] When determining the number of power supplies, it is also necessary to take into account the inrush current of loads (refer to *Planning the system with power supply, page 8*).
[4] This assembly is only required if the IPP-MAP0005-2 MAP power supply 150W is installed.

[5] When one or more ICP-MAP0010 MAP LSN gateways are operated remotely, there must be one IPP-MAP0005-2 MAP power supply 150W in the same enclosure. The expansion enclosure allows for the installation of up to two LSN gateways, provided that applicable regulations are met.
[6] Mount the enclosure directly under or at the side (top edge flush) of the ICP-MAP0111 MAP panel enclosure.

**Refer to**
- *MAP panel enclosure, page 21*
- *MAP power enclosure, page 23*
- *MAP expansion enclosure, page 24*

## 2.4.1 Planning the system with power supply

**Number of power supplies**

To guarantee a reliable system booting, take into account the following:
- Inrush current of the connected loads
- Current limit of the IPP-MAP0005-2 MAP power supply 150W
- Current limit of the MAP5000 panel

**Notice!**
The normal operating condition is not the subject of these considerations.

**Inrush current**
- IUI-MAP0001-3 | IUI-MAP0002-3 MAP touch keypad: max. 250 mA
- ICP-MAP0010 MAP LSN gateway: max. 1000 mA, AUX is switched on later
- ICP-MAP0007-2 MAP DE interface module: negligible

**Current limitation**
- Power supply per output A/B (short-time): 3.2 A
- MAP5000 panel at external BDB: 1.6 A

Refer to *Typical configuration with ICP-MAP0111 MAP panel enclosure, page 9*.

**Definition of power supply segment**

A power supply segment is a power supply with all loads supplied by the power supply.

**Power supply segment**

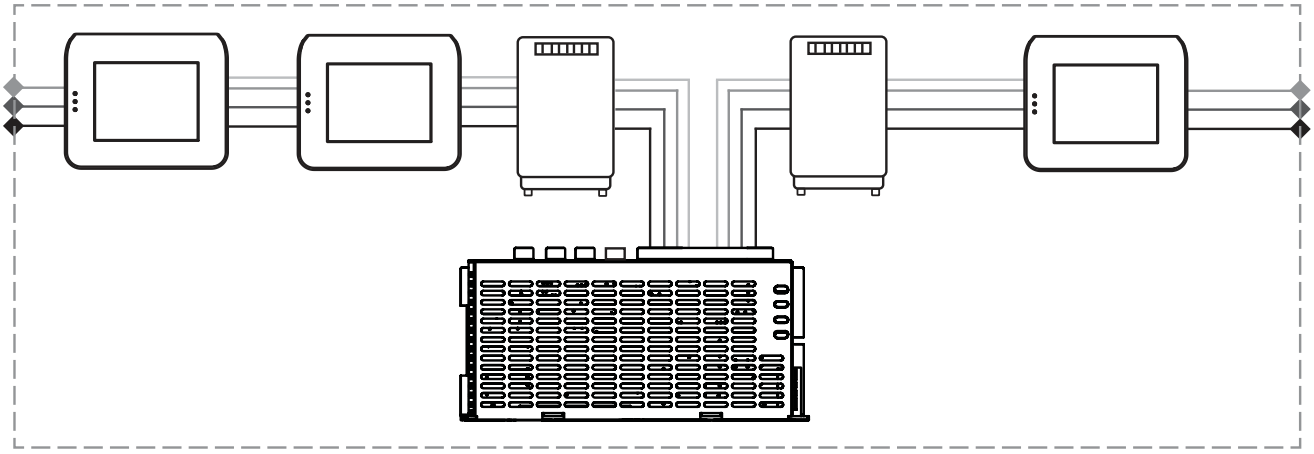

4-wire cables are used for load connection within the power supply segment.

**The following conditions must be taken into account when planning in order to guarantee a reliable system booting:**

**Condition 1**

3-wire cables are always used for connections between power supply segments (without +28 V, red wire)

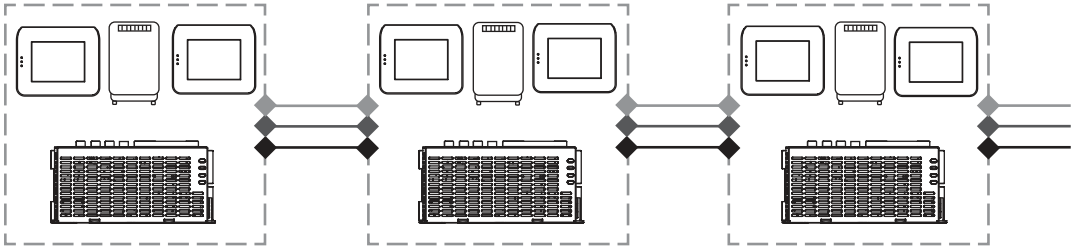

**Figure 2.1:** Wiring of power supply segments

**Condition 2**

Charged batteries must be connected to the power supply to ensure reliable system start-up.

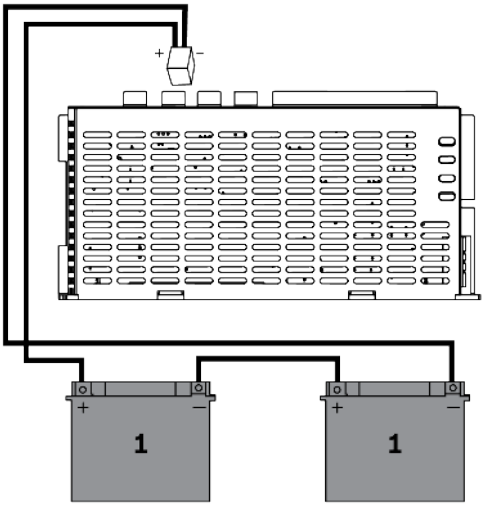


**Figure 2.2:** Batteries for system booting

**Condition 3**

To ensure reliable system start-up, it is necessary to take into account the cable length and wire gauge:

– between power supply and first touch keypad
– between touch keypads

Refer to *Cable length, page 11*.

**Typical configuration with ICP-MAP0111 MAP panel enclosure**

MAP5000 panel - MAP DE interface module - 3 LSN gateways - 2 touch keypads

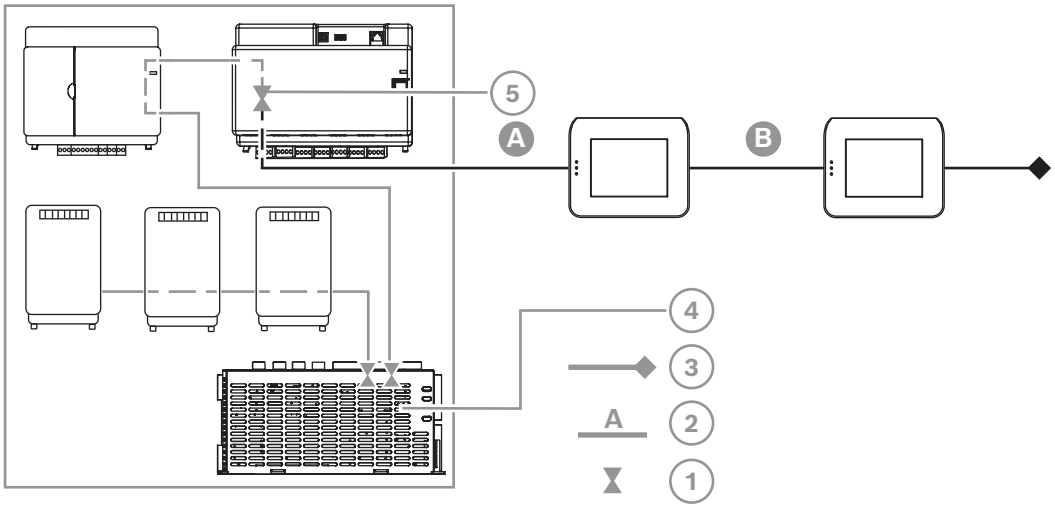


**Figure 2.3:** Wiring with ICP-MAP0111

| Callout | Description |
|---|---|
| 1 | Current limitation |
| 2 | 4-wire connection, take into account cable length, refer to *Cable length, page 11* |
| 3 | 3-wire connection to the next power supply segment |
| 4 | Short-time current limitation to 3.2 A per output A / B |
| 5 | Current limitation to 1.6 A between internal and external BDB |

**Remote operation with ICP-MAP0120 MAP expansion enclosure**

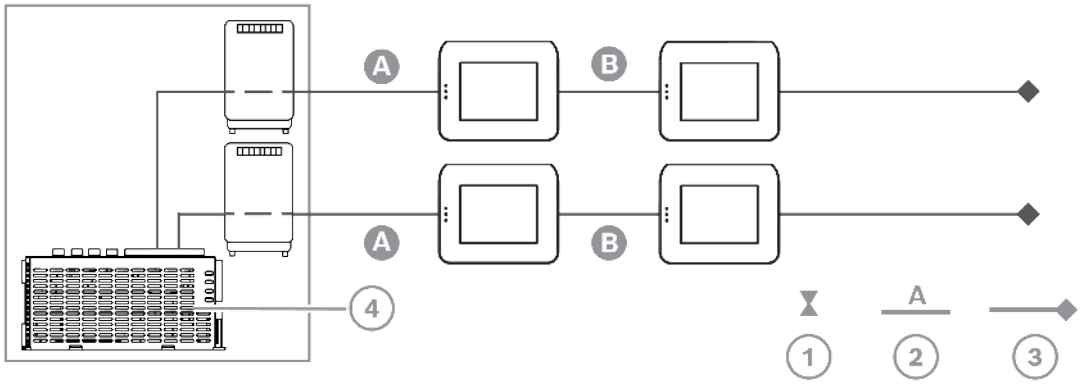


**Figure 2.4:** 2 LSN modules with up to 4 touch keypads

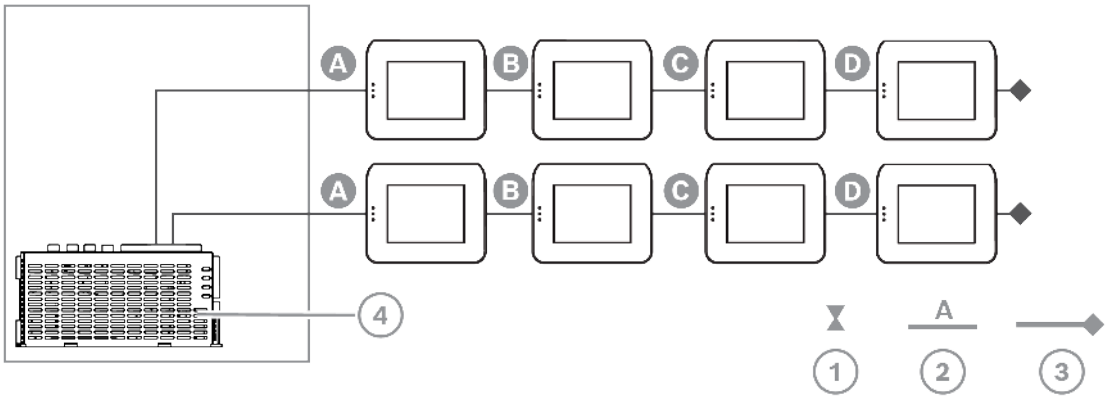


**Figure 2.5:** Up to 8 touch keypads

| Callout | Description |
|---|---|
| 1 | Current limitation |
| 2 | 4-wire connection, take into account cable length, refer to *Cable length, page 11* |
| 3 | 3-wire connection to the next power supply segment |
| 4 | Short-time current limitation to 3.2 A per output A / B |

**Cable length**

The maximum number of touch keypads that can be supplied by one power supply depends greatly on the length and diameter of the cable used.

| Wire diameter | Wire cross-section | Length A | Length B | Length C | Length D |
|---|---|---|---|---|---|
| 0.8 mm | 0.503 $mm^2$ . | 325 m | - - - | - - - | - - - |
| 0.8 mm | 0.503 $mm^2$ . | 100 m | 135 m | - - - | - - - |
| 0.8 mm | 0.503 $mm^2$ . | 50 m | 225 m | - - - | - - - |
| 0.8 mm | 0.503 $mm^2$ . | 50 m | 50 m | 50 m | - - - |
| 1.0 mm | 0.785 $mm^2$ . | 500 m | - - - | - - - | - - - |
| 1.0 mm | 0.785 $mm^2$ . | 175 m | 175 m | - - - | - - - |
| 1.0 mm | 0.785 $mm^2$ . | 100 m | 325 m | - - - | - - - |
| 1.0 mm | 0.785 $mm^2$ . | 100 m | 75 m | 75 m | - - - |
| 1.0 mm | 0.785 $mm^2$ . | 50 m | 400 m | - - - | - - - |
| 1.0 mm | 0.785 $mm^2$ . | 50 m | 125 m | 125 m | - - - |
| 1.0 mm | 0.785 $mm^2$ . | 50 m | 50 m | 50 m | 50 m |

**Table 2.1:** Cable lengths

**The following applies for VdS**

For remote operation of the IPP-MAP0005-2 MAP power supply 150W, a touch keypad assigned to the same area must be provided for indication of power supply trouble (trouble in mains supply / battery).

## 2.4.2 Planning the system with BDB/CAN splitter

- When using a MAP BDB/CAN splitter to split the external BDB into two independent areas, chose one of the following wiring possibilities:

**Wiring with a MAP BDB/CAN splitter and a MAP LSN gateway**

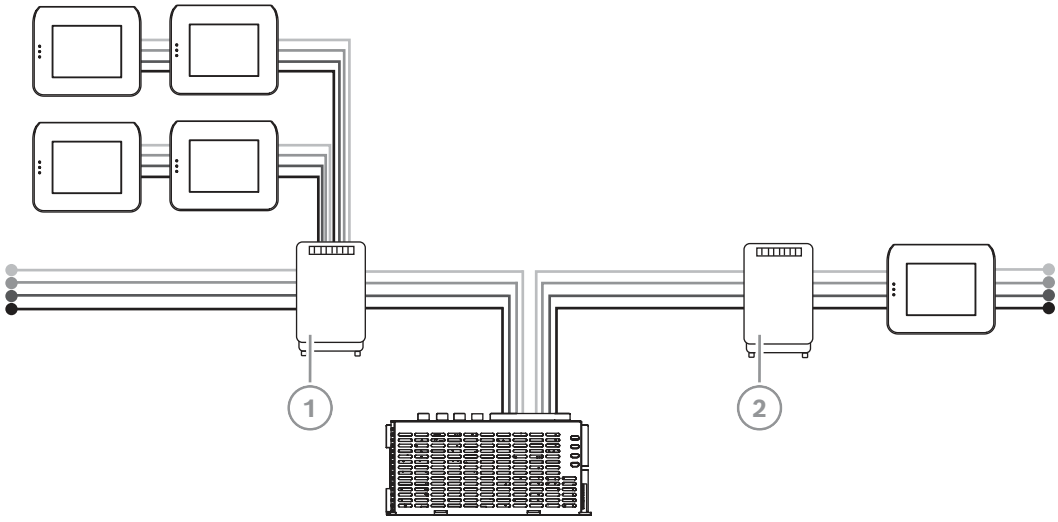


| Callout | Description |
|---|---|
| 1 | ICP-MAP0012 MAP BDB/CAN splitter |
| 2 | ICP-MAP0010 MAP LSN gateway |

**Wiring with two MAP BDB/CAN splitters**

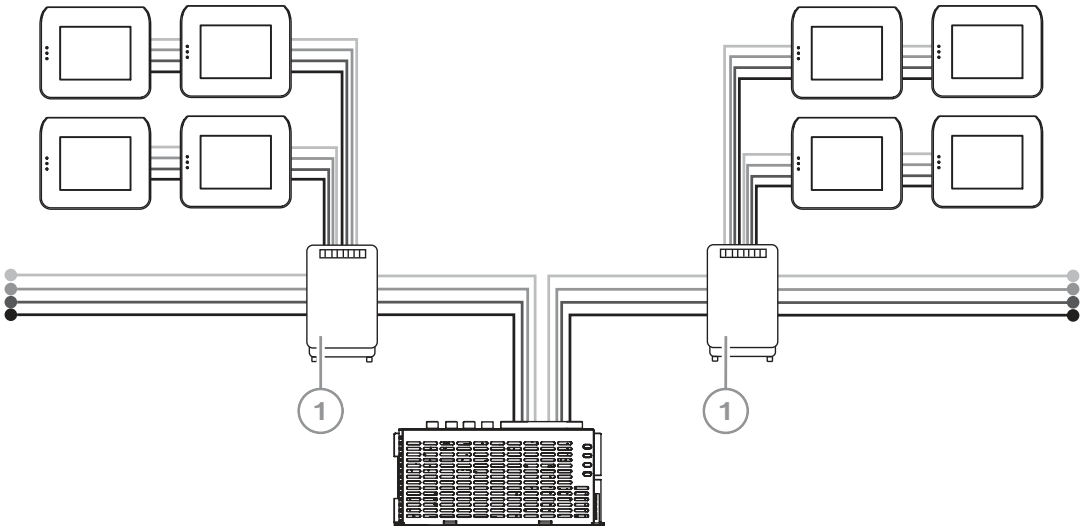


| Callout | Description |
|---|---|

| | |
|---|---|
| 1 | ICP-MAP0012 MAP BDB/CAN splitter |

**Cable length**

The cable length of the splitted external BDB depends on the number of added touch keypads and of the cable diameter.

The maximum cable length is 500 m per BDB connector.

1. When planning the system with one or more MAP BDB/CAN splitters, ensure to use an appropriate cable length and diameter in accordance with the necessary number of touch keypads.
2. Cascading of MAP BDB/CAN splitters is prohibited.

**Relation of cable length, diameter and number of touch keypads**

| **Cable diameter** | **Number of touch keypads** | | | | | |
|---|---|---|---|---|---|---|
| | **1** | **2** | **3** | **4** | **5** | **6** |
| 0.6 mm | 225 m | 225 m | 200 m | 150 m | 120 m | 100 m |
| 0.8 mm | 400 m | 400 m | 350 m | 275 m | 220 m | 200 m |
| 1.0 mm | 620 m | 620 m | 550 m | 450 m | 360 m | 300 m |

**Notice!**

These cable lengths apply only for keypads with hardware version 1.0.2. The cable lengths of older keypads are half of the lengths displayed in the table above.

**Notice!**

These cable lengths apply for keypads that are mounted with an equal cable distance in between each other.

**Refer to**

– *Splitting the external BDB with a BDB/CAN splitter, page 53*

## 2.5 System overview

This chapter shows an overview of the system as it is installed in the ICP-MAP0111 MAP panel enclosure.

**System installation in ICP-MAP0111 MAP panel enclosure (hinged mounting plate closed)**

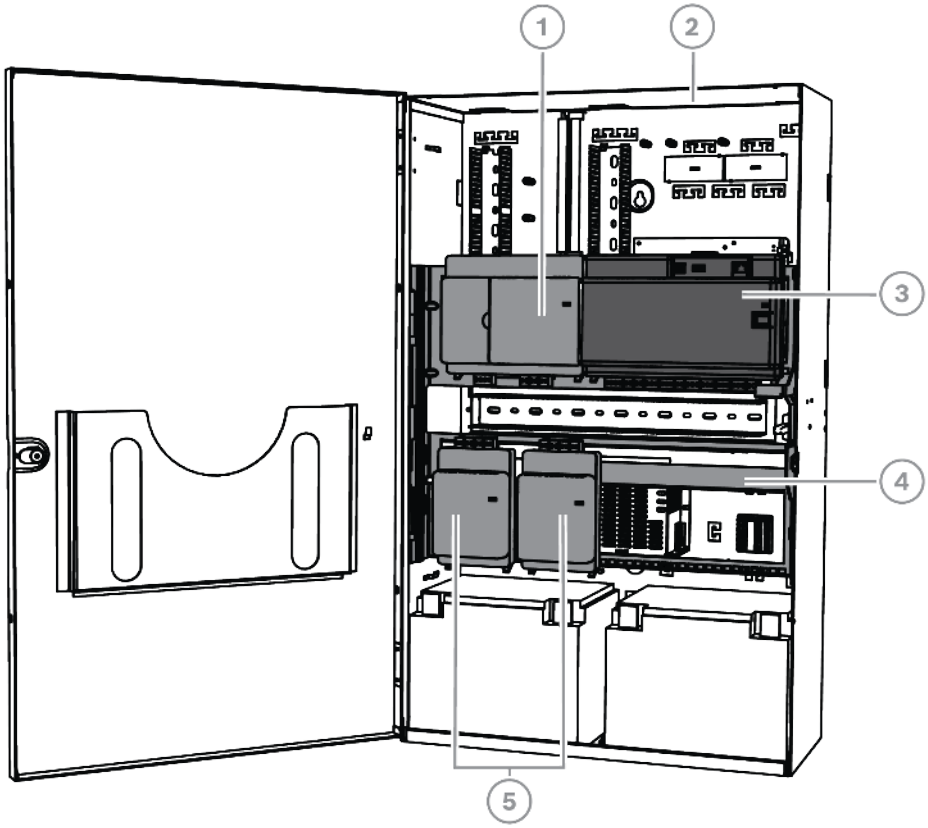


| Callout | Description |
|---|---|
| 1 | ICP-MAP0007-2 MAP DE interface module |
| 2 | ICP-MAP0111 MAP panel enclosure |
| 3 | MAP5000 panel |
| 4 | ICP-MAP0025 MAP hinged mounting plate |
| 5 | ICP-MAP0010 MAP LSN gateway |

**System installation in ICP-MAP0111 MAP panel enclosure (hinged mounting plate open)**

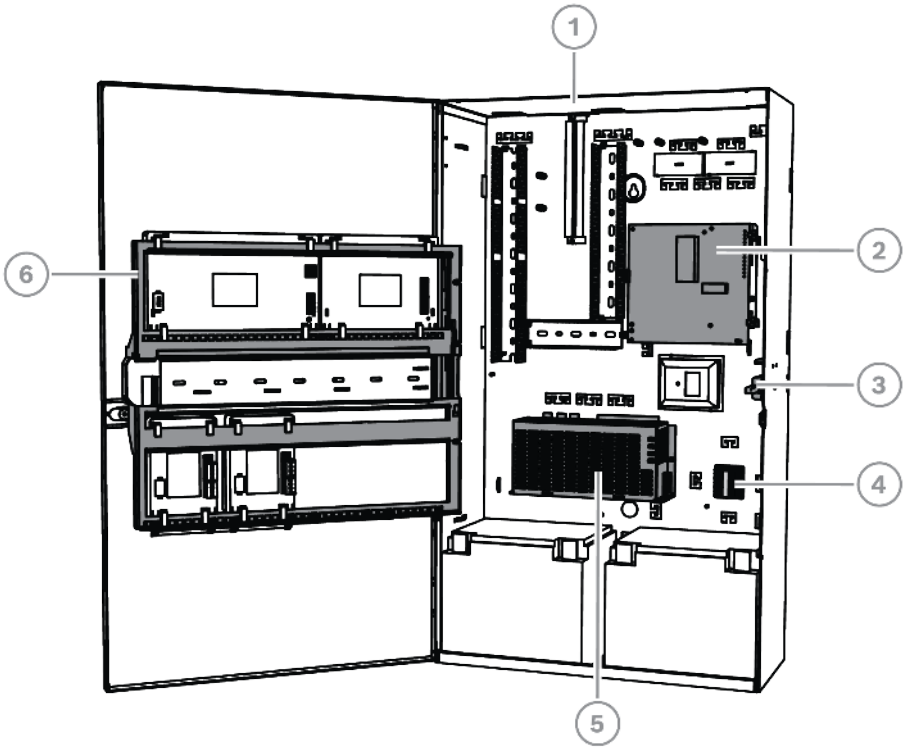


| Callout | Description |
|---|---|
| 1 | ICP-MAP0111 MAP panel enclosure |
| 2 | AT x000 communicator |
| 3 | ICP-MAP0050 MAP panel/power enclosure tamper switch |
| 4 | ICP-MAP0065 MAP terminal block |
| 5 | IPP-MAP0005-2 MAP power supply 150W |
| 6 | ICP-MAP0025 MAP hinged mounting plate |

**System installation in ICP-MAP0120 MAP expansion enclosure**

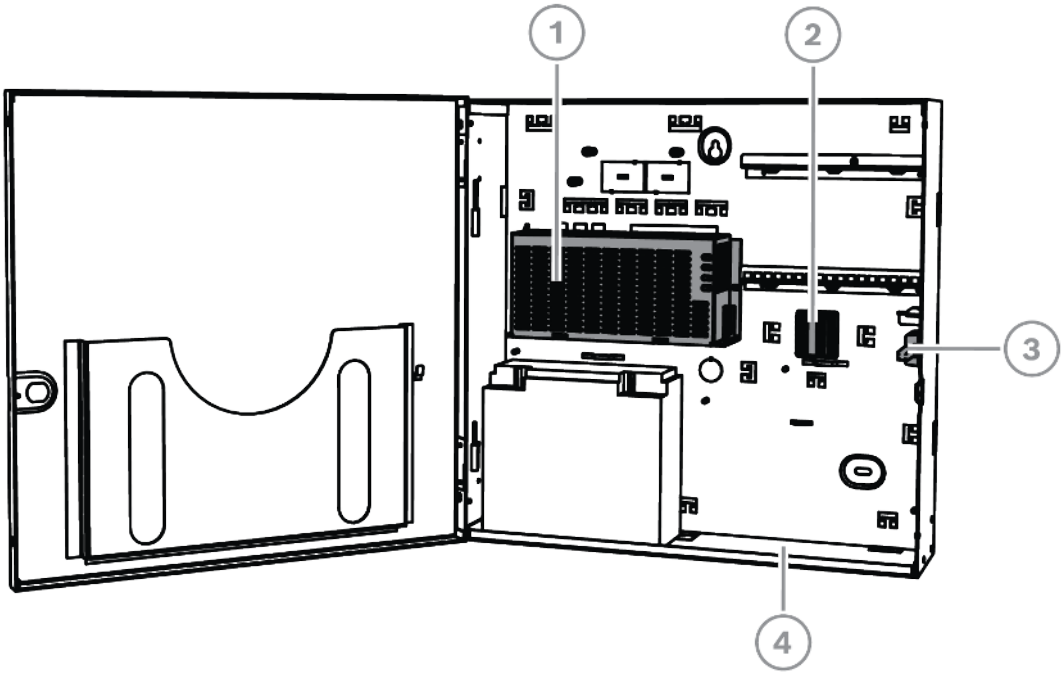


| Callout | Description |
|---|---|
| 1 | IPP-MAP0005-2 MAP power supply 150W |
| 2 | ICP-MAP0065 MAP terminal block |
| 3 | ICP-MAP0055 MAP expansion enclosure tamper switch |
| 4 | ICP-MAP0120 MAP expansion enclosure |

**Enclosure overview**

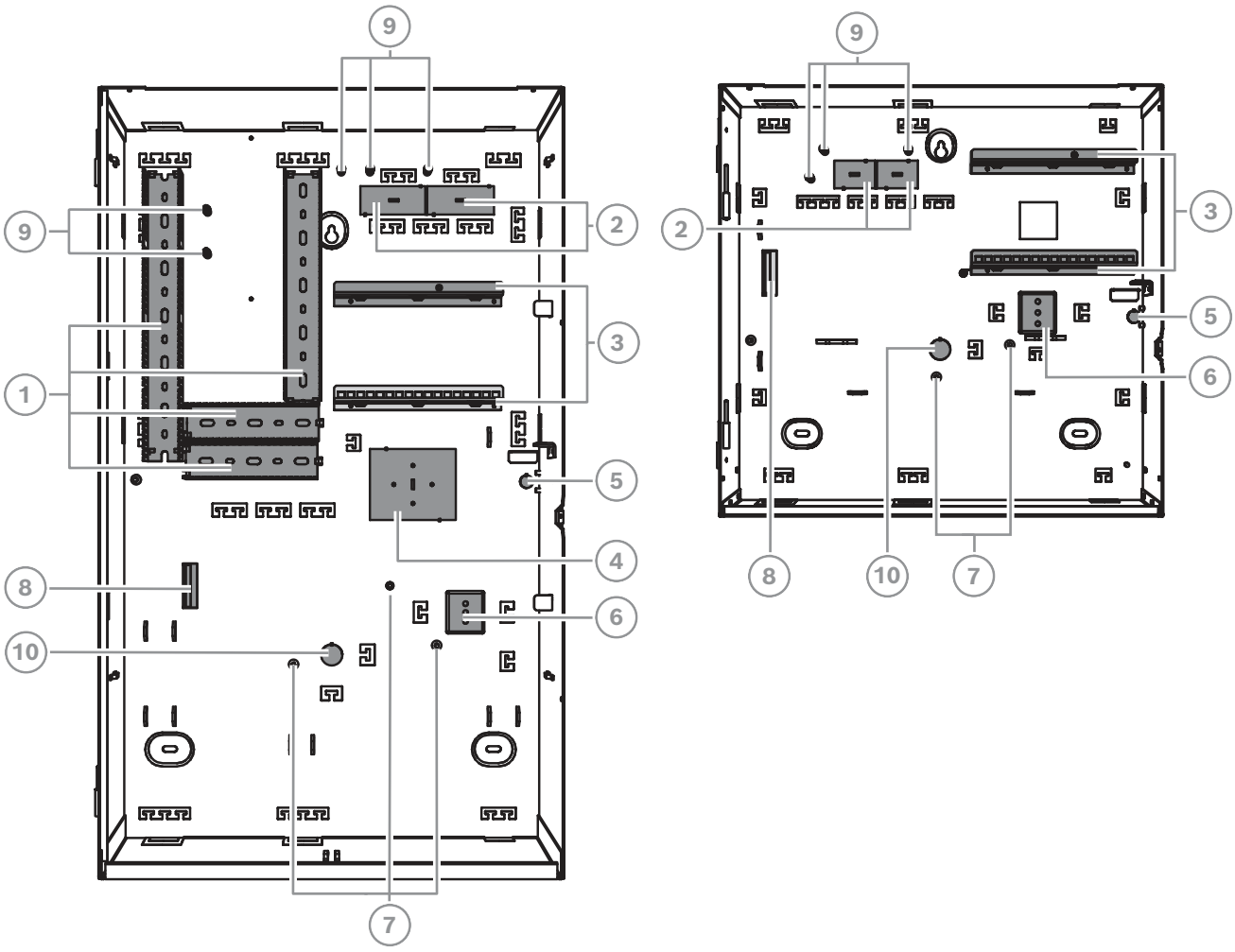


| Callout | Description |
|---|---|
| 1 | Wire trays |
| 2 | Wire knockouts |
| 3 | Mounting rails for ICP-MAP0020 MAP accessory mounting plate |
| 4 | Mounting location for TAE box |
| 5 | Knockout for wall tamper |
| 6 | Mounting location for ICP-MAP0065 MAP terminal block |
| 7 | Grounding studs |
| 8 | Flange for IPP-MAP0005-2 MAP power supply 150W |
| 9 | Shielding connection points |
| 10 | Knockout for AC wires (use when AC wires come in from the back of the enclosure) |

# 3 Installation

- Use proper anchor and screw sets when installing the enclosure on surfaces. Refer to the drill template for detailed instructions.
- Ensure that there is enough free space to the left of the enclosure so that the enclosure door and the ICP-MAP0025 MAP hinged mounting plate have full range of motion.
  - For a fully opened door, at least 460 mm (18 in) is required.
  - For a door opened at 90°, at least 32 mm (1.25 in) is required.
- Ensure that there is at least 100 mm (4 in) of space around the enclosure to allow easy access to cable conduits.
- Leave adequate space below or next to the enclosure for an ICP-MAP0120 MAP expansion enclosure kit for future additions to the system.
- To minimize battery depletion, install the enclosure in locations at normal room temperature.
- Use the ICP-MAP0111 installation mounting template or the ICP-MAP0120 installation mounting template

## 3.1 Removing the enclosure knockouts

1. Unhinge and remove the enclosure door and set it aside.
2. Remove the enclosure knockouts in the order shown in the figure below.

**Enclosure knockouts on ICP-MAP0111 MAP panel enclosure or ICP-MAP0120 MAP expansion enclosure**

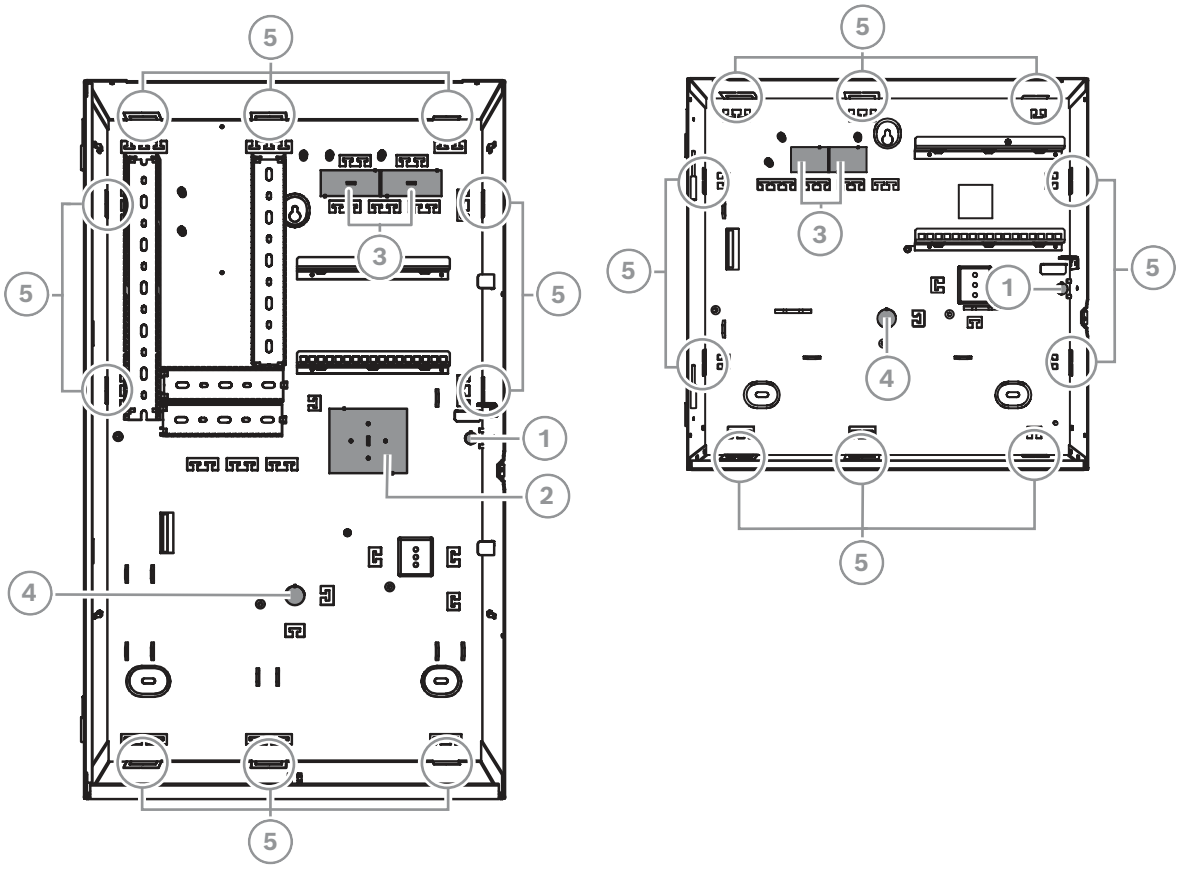


| Callout | Description |
|---|---|

| | |
|---|---|
| 1 | Knockout for wall tamper (required in accordance with VdS and EN50131 grade 3) |
| 2 | Knockout for TAE box |
| 3 | Knockouts for wiring |
| 4 | Knockout for AC wires (use when AC wires come in from the back of the enclosure) |
| 5 | Side wall knockouts for wiring |

## 3.2 Installing the tamper switch rail

– Install the ICP-MAP0050 MAP panel/power enclosure tamper switch in the ICP-MAP0111 MAP panel enclosure.
– Install the ICP-MAP0055 MAP expansion enclosure tamper switch in the ICP-MAP0120 MAP expansion enclosure.

1. Remove the tamper switch rail from the package.
2. Mount the tamper switch rail to the inner right side of the enclosure as shown in the figure below.
3. Secure the tamper switch rail with the two supplied screws.
   Do **not** mount the tamper switch at this time.

**Mounting the tamper switch rail**

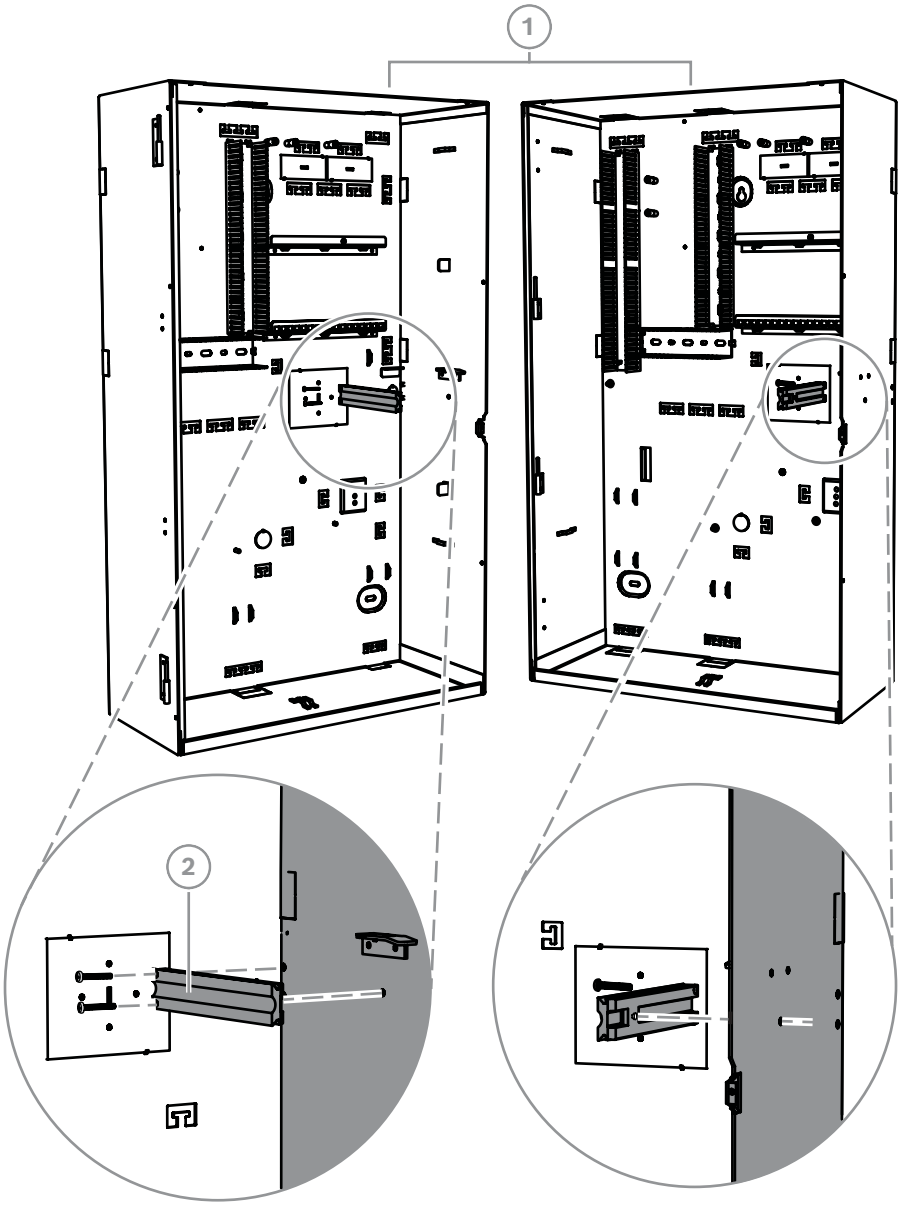


| Callout | Description |
|---|---|
| 1 | ICP-MAP0111 MAP panel enclosure |
| 2 | ICP-MAP0050 MAP panel/power enclosure tamper switch |

Use the same way as shown above to mount the tamper switch rail for ICP-MAP0055 MAP expansion enclosure tamper switch in the ICP-MAP0120 MAP expansion enclosure.

## 3.3 Mounting the enclosure

### 3.3.1 MAP panel enclosure

**Inserting the wall tamper plug**

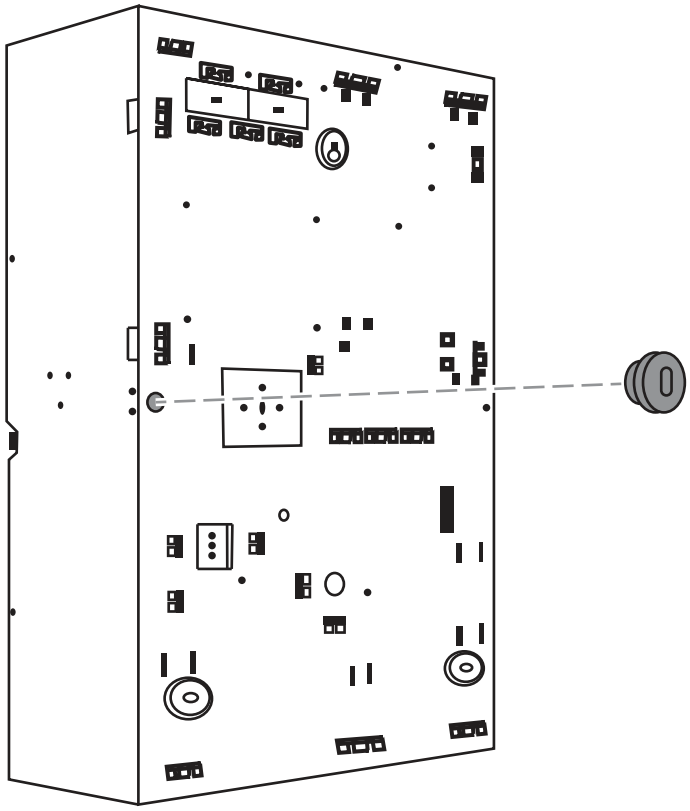

1. Use the supplied drill template to mark the holes on the intended surface.
   The drill template can be found in the enclosure box.
2. If a wall tamper is required, insert the plug for the tamper switch into the back of the enclosure (required in accordance with VdS and EN50131 grade 3) as shown in the figure.
3. Secure the plug to the wall using a suitable screw (not supplied).

**Mounting the ICP-MAP0111 MAP panel enclosure**

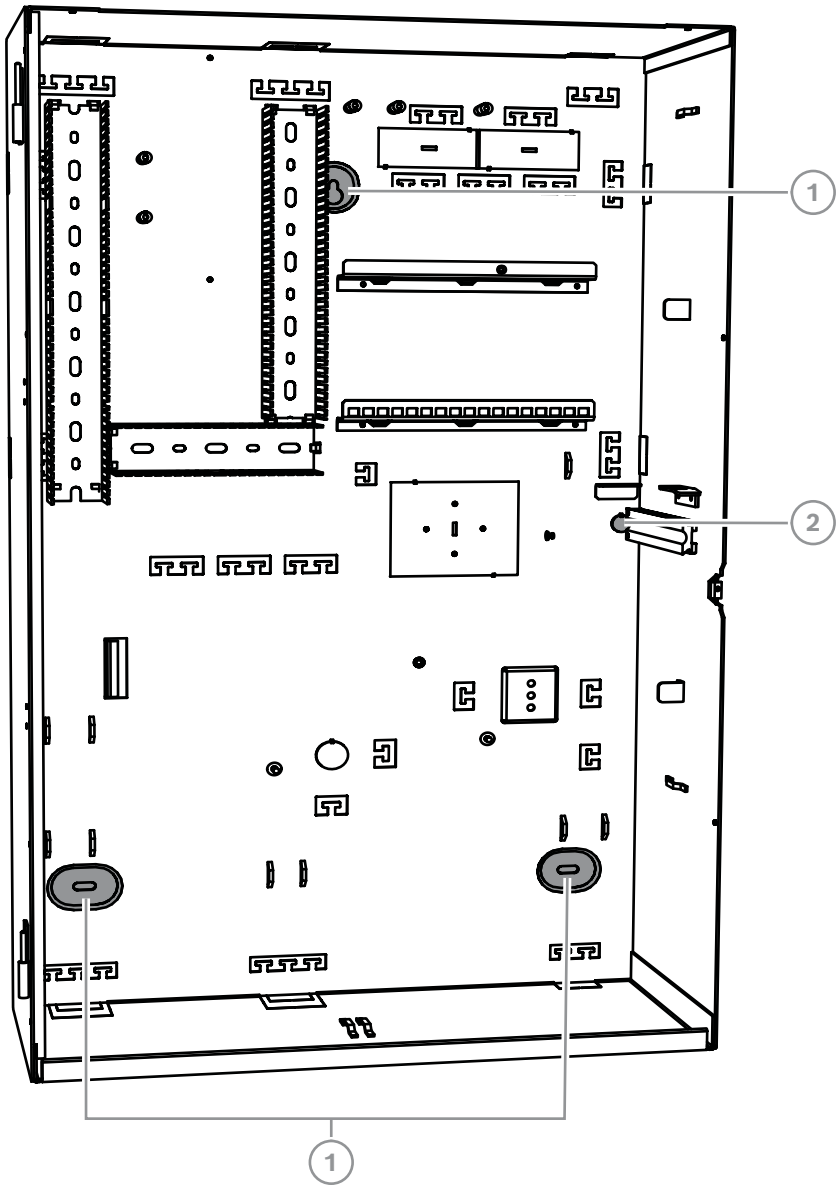


| Callout | Description |
|---|---|
| 1 | Mounting hole |
| 2 | Hole for screw to secure wall tamper plug |

1. Mount the enclosure to the intended surface using suitable screws and anchors (not supplied). Use the mounting holes as shown in the figure.
2. Ensure that all screws are tight and that the enclosure is securely fastened to the mounting surface.

### 3.3.2 MAP power enclosure

- Connect the ICP-MAP0115 MAP power enclosure to the ICP-MAP0111 MAP panel enclosure to provide additional power when high power capacity is required.

**ICP-MAP0115 MAP power enclosure with thermistor**

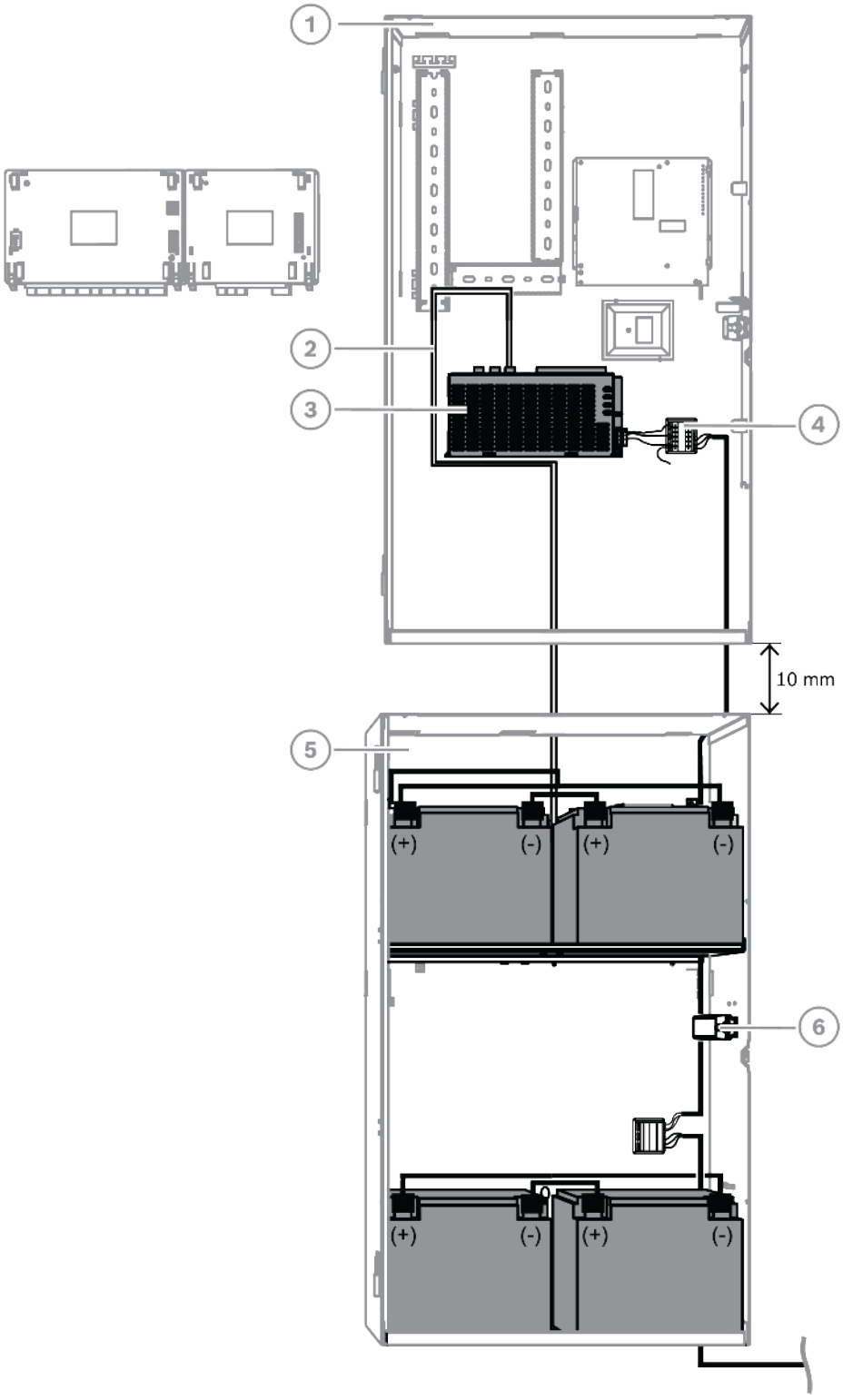


| Callout | Description |
|---|---|

| | |
|---|---|
| 1 | ICP-MAP0111 MAP panel enclosure |
| 2 | ICP-MAP0130 Thermistor cable |
| 3 | IPP-MAP0005-2 MAP power supply 150W |
| 4 | ICP-MAP0065 MAP terminal block |
| 5 | ICP-MAP0115 MAP power enclosure |
| 6 | ICP-MAP0050 MAP panel/power enclosure tamper switch |

**Refer to**

– *Installing the thermistor cable, page 27*

### 3.3.3 MAP expansion enclosure

- To install the ICP-MAP0120 expansion enclosure in a 19-inch rack, connect the ICP-MAP0035 MAP enclosure rack mounting kit to the ICP-MAP0120 MAP expansion enclosure.

**Installing the rack mount brackets to the ICP-MAP0120 MAP expansion enclosure**

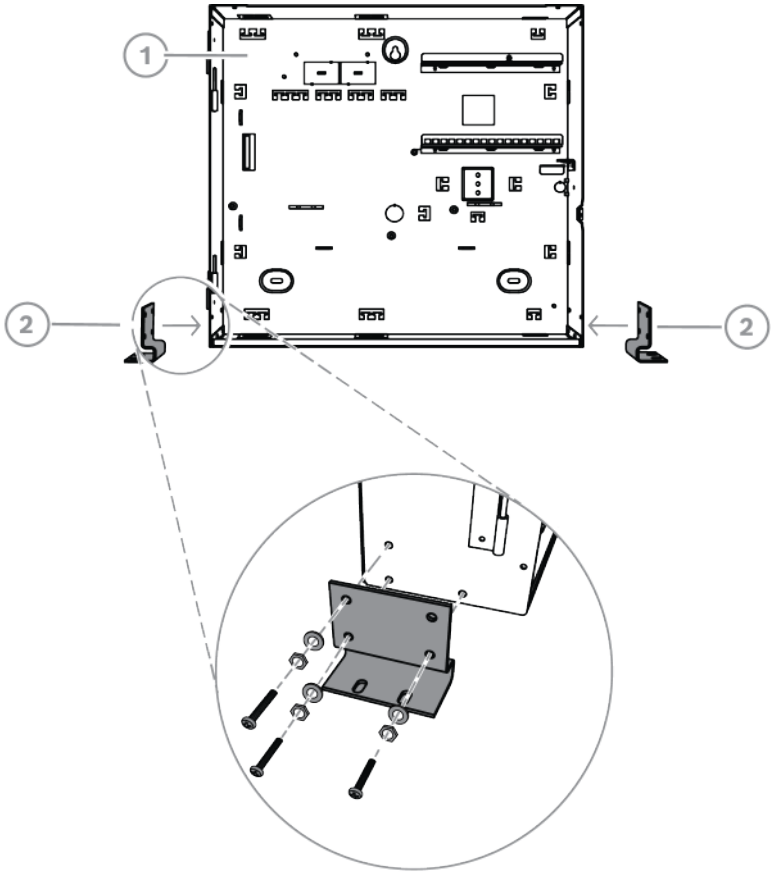


| Callout | Description |
|---|---|
| 1 | ICP-MAP0120 MAP expansion enclosure |
| 2 | ICP-MAP0035 MAP enclosure rack mounting kit |

## 3.4 Checking the AC connection

1. Ensure that the AC circuit breaker switch is off.
2. Connect the AC line to the AC terminal block.
3. Switch the AC breaker on.
4. Verify that the circuit breaker does not trip and that appropriate line voltage is present on the fused side of the AC terminal block.
5. Switch the AC breaker off and continue with the rest of the installation.

**Warning!**
After ensuring the AC connection is functional, turn the AC breaker off before continuing the installation process.

## 3.5 Installing the power supply

**Caution!**
Debris
Damage to the power supply due to debris during the installation is possible.

**Notice!**
To prevent damage to the power supply during installation, ensure that the supplied protective dust cover label is on top of the power supply before installing it.

**Installing the power supply**

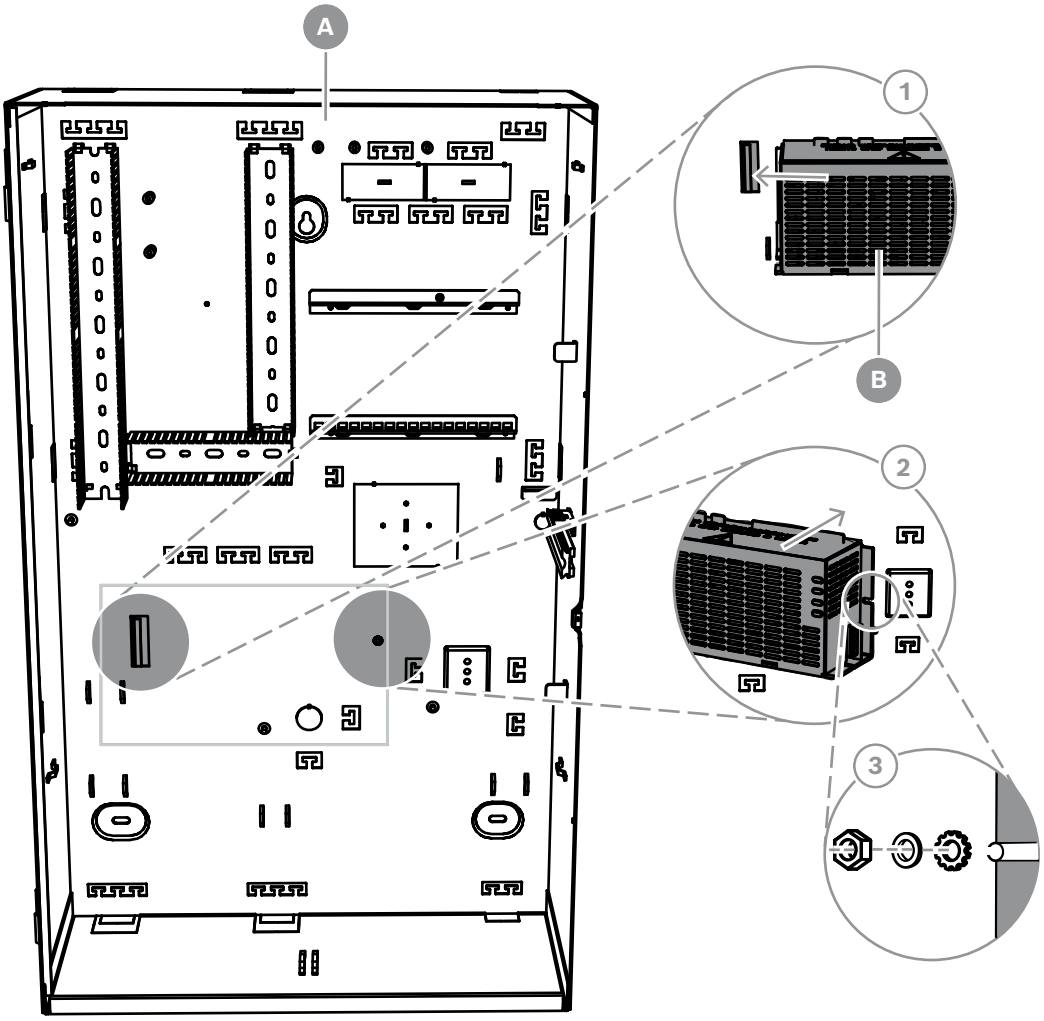


| Callout | Description |
|---|---|
| A | ICP-MAP0111 MAP panel enclosure |
| B | IPP-MAP0005-2 MAP power supply 150W |

1. Slide the left side of the power supply against the flange on the left side of the enclosure back wall.
2. Align the cut-out on the right side of the power supply.
3. Secure the power supply to the enclosure back wall with the supplied hardware in the following order: external tooth washer, washer, hex nut

▸ Refer to *Technical Specifications, page 73* for power specifications.

## 3.6 Installing the AC terminal block

**Warning!**
When installing the power supply, ensure that the ground wire from the MAP terminal block is connected to the grounding stud.
The ground wire from the MAP terminal block to the power supply **does not** provide an earth ground for the enclosure. It only provides an earth ground for the power supply.

**Warning!**
Electricity
Once the terminal block connected to the MAP terminal block has been put into the power supply, do not remove it anymore. Never remove the terminal block connected to the MAP terminal block from the power supply during operation.

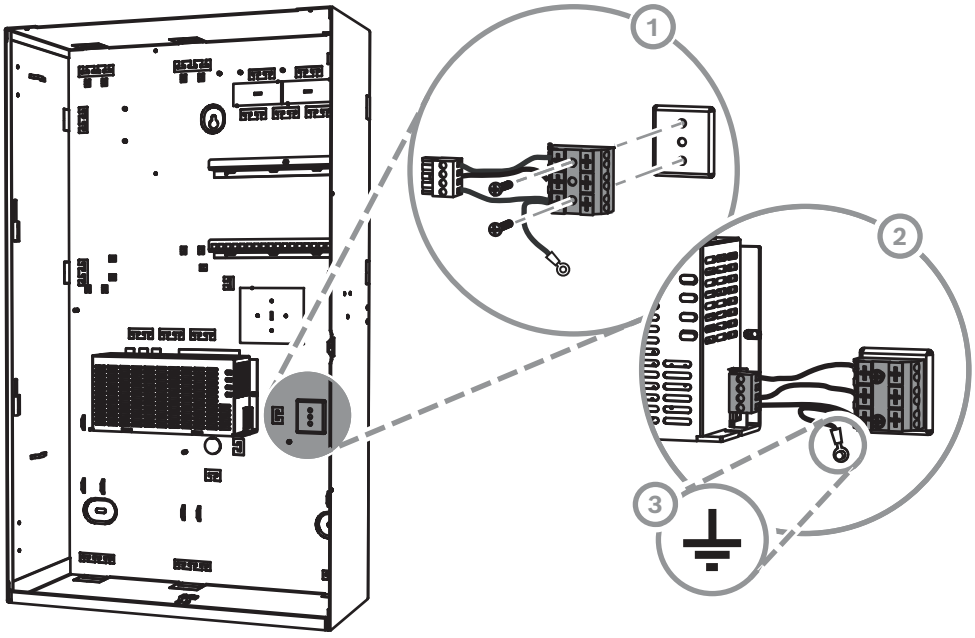


1. Mount the ICP-MAP0065 MAP terminal block to the enclosure back wall into the corresponding mounting holes and secure it with the supplied screws.
2. Plug the terminal block connected to the MAP terminal block into the power.
3. Connect the ground wire to the grounding stud of the enclosure back.

## 3.7 Installing the thermistor cable

The thermistor cable is used to adjust the battery charge voltage to compensate for the air temperature around the batteries.

1. Plug the thermistor cable into the power supply to the terminal marked .
2. Mount the thermistor on the inside rear of the enclosure right on the top of the two batteries.

**Notice!**
In case more than one enclosure is used, mount the thermistor cable in the enclosure in which the power supply is placed.

**Mounting the thermistor**

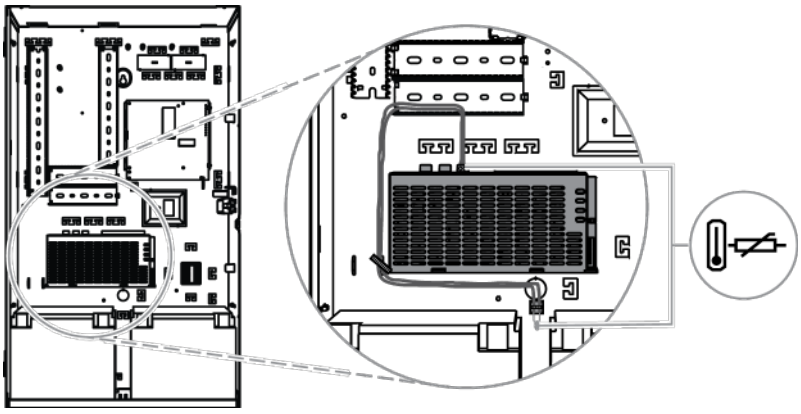

## 3.8 Installing the TAE box

- If the TAE box is not mounted on the wall behind the enclosure, mount the TAE box to the enclosure back wall either horizontally or vertically as desired.

**Installing the TAE box**

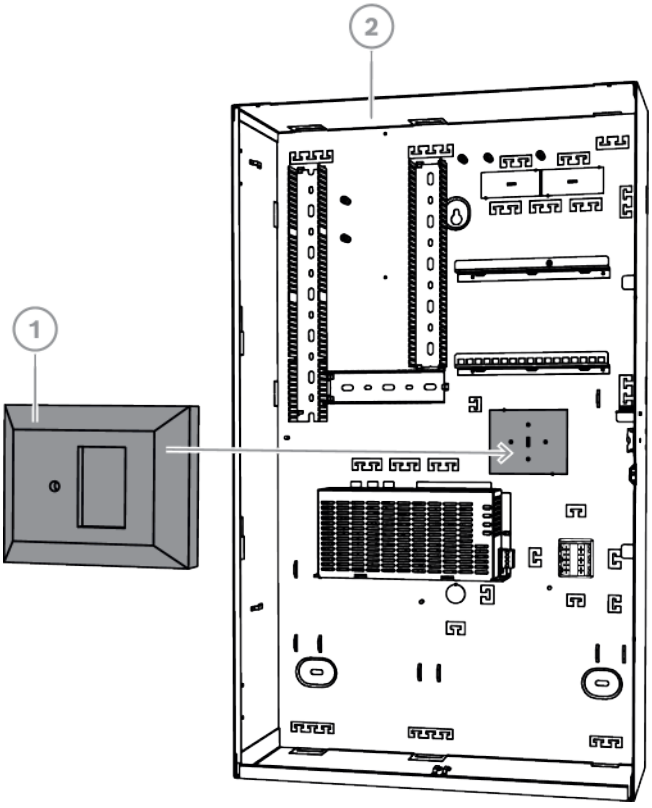


| Callout | Description |
|---|---|
| 1 | TAE box |

| | |
|---|---|
| 2 | ICP-MAP0111 MAP panel enclosure |

## 3.9 Installing the accessory mounting plate

1. Align the earth ground stud on the accessory mounting plate with the earth ground hole on the top mounting rail in the upper right side of the enclosure wall as shown in the figure below.
2. Slide the clips on the back of the accessory mounting plate onto the top and bottom mounting rails.

**Aligning the accessory mounting plate**

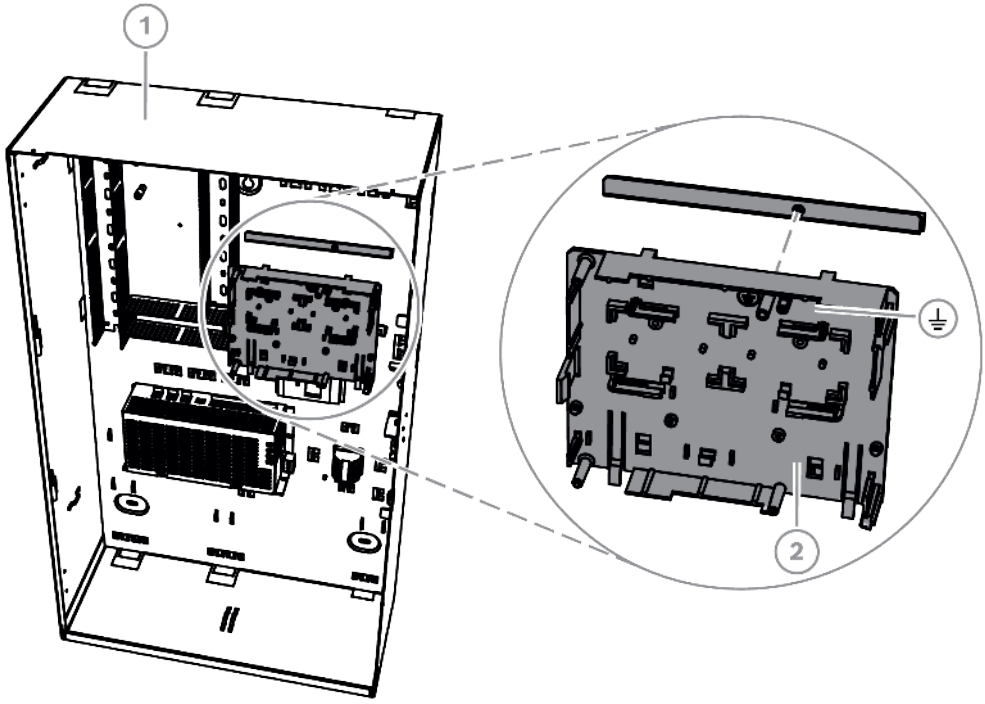


| Callout | Description |
|---|---|
| 1 | ICP-MAP0111 MAP panel enclosure |
| 2 | ICP-MAP0020 MAP accessory mounting plate |

- Ensure that the locking clips snap into the bottom mounting rail as shown in the figure below.

**Installing the accessory mounting plate**

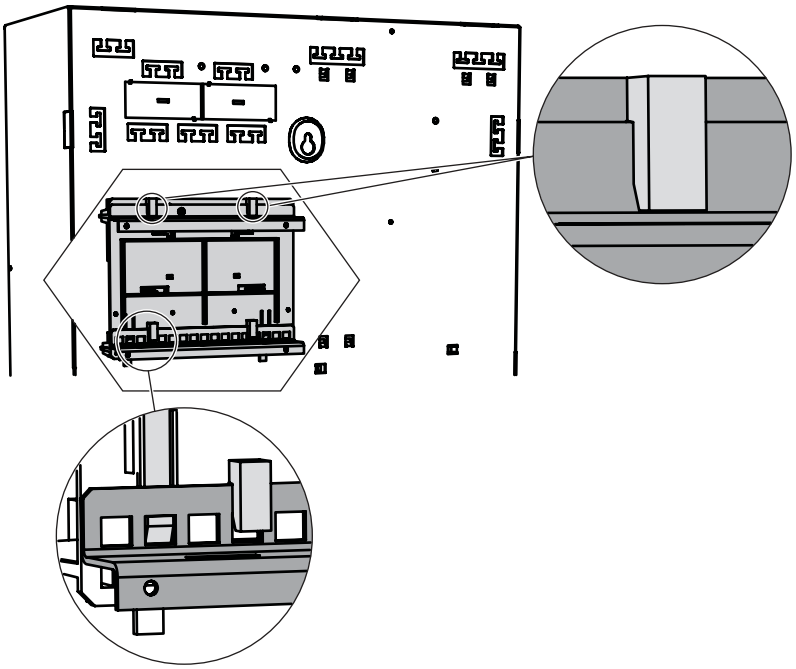

Refer to *Accessory mounting plate overview, page 30* for the locations of the modules that mount on the accessory mounting plate.

**Accessory mounting plate overview**

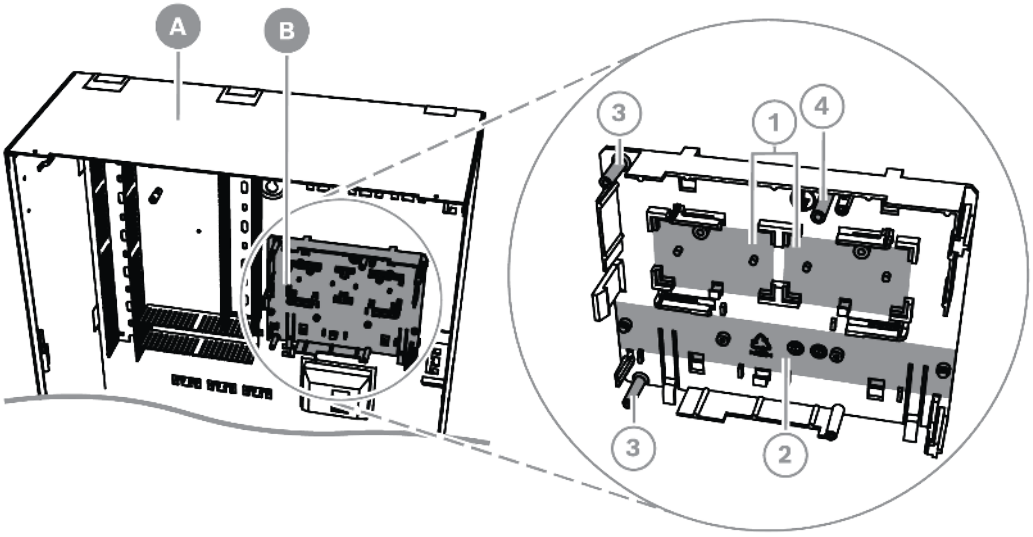


| Callout | Description |
|---|---|
| A | ICP-MAP0111 MAP panel enclosure |
| B | ICP-MAP0020 MAP accessory mounting plate |
| 1 | Locations for ICP-MAP0017 MAP 12V-28V power converters (two maximum) |
| 2 | Location for fuse plate (SIV) (one maximum) |
| 3 | Screw locations for AT x000 communicator (one maximum) |

| | |
|---|---|
| 4 | Screw location for AT x000 earth ground |

## 3.10 Installing the power converter

1. Mount the ICP-MAP0017 MAP 12V-28V power converter onto the accessory mounting plate as shown in the figure below (screws not supplied).
2. Connect the field wiring to the terminal block of the power converter as shown in the figure below and leave the other ends unconnected.

**Installing the power converter**

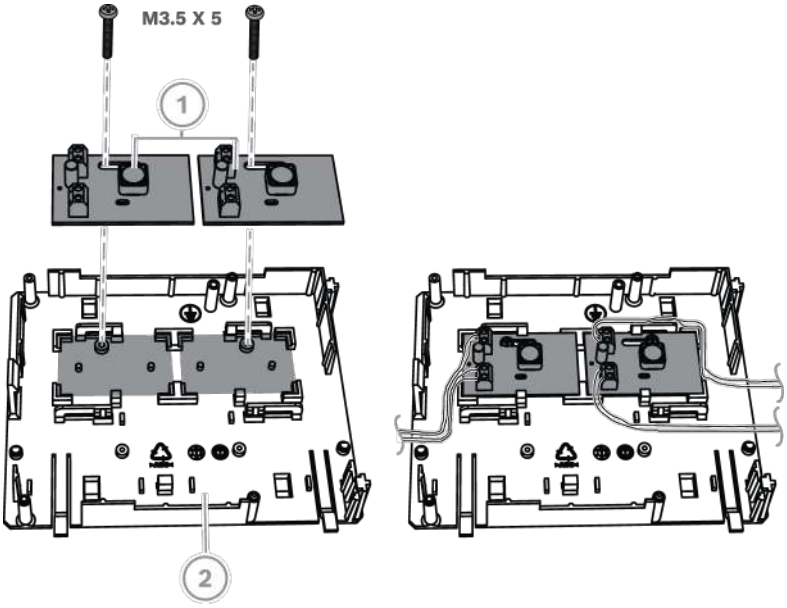


| Callout | Description |
|---|---|
| 1 | ICP-MAP0017 MAP 12V-28V power converter |
| 2 | ICP-MAP0020 MAP accessory mounting plate |

## 3.11 Installing the SIV 28 fuse plate

1. Mount the SIV 28 fuse plate onto the accessory mounting plate as shown in the figure below (screws not supplied).
2. Connect the field wiring to the terminal block of the fuse plate as shown in the figure below and leave the other ends unconnected.

**Notice!**
Use the corresponding ratings for the fuses SI 1 ... SI 5. (minimum 250 mA, maximum 1 A depending on the connected loads).
The overall current of all SIV outputs must not exceed the available maximum current of the voltage output used.

**Installing the SIV 28 fuse plate**

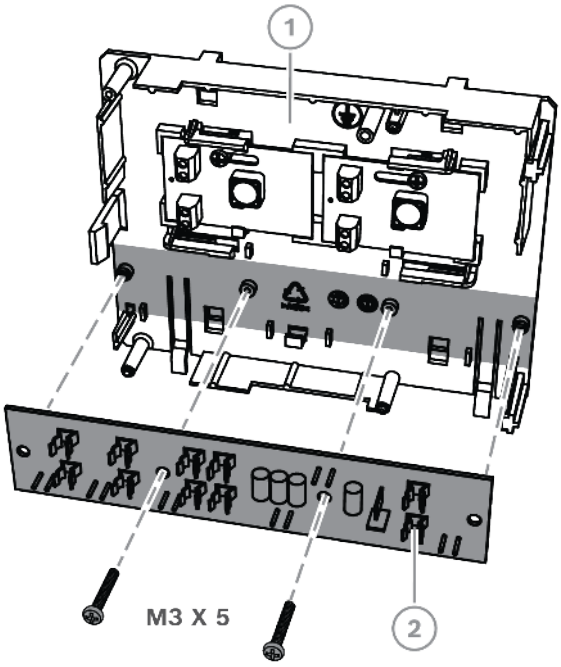


| Callout | Description |
|---|---|
| 1 | ICP-MAP0020 Accessory mounting plate |
| 2 | SIV 28 fuse plate (SIV 28 MAP 28V fuse protected power distributer) |

## 3.12 Installing the AT x000 communicator

The AT x000 communicator mounts onto the ICP-MAP0020 MAP accessory mounting plate over the power converter (if installed). If the SIV 28 fuse plate is mounted on the accessory mounting plate, the communicator cannot be mounted on the same mounting plate.

1. Slide the right edge of the AT x000 under the clips on the right-hand side of the accessory mounting plate.
2. Gently push down on the left edge of the AT x000 until it snaps into place under the single clip on the left-hand side of the accessory mounting plate.
3. Insert the supplied grounding screw through the AT x000 and the accessory mounting plate, and fasten it into the top mounting rail.

**Notice!**
To ensure proper system grounding, you must insert the grounding screw through the AT x000 and the accessory mounting plate.

**Installing the AT x000 communicator**

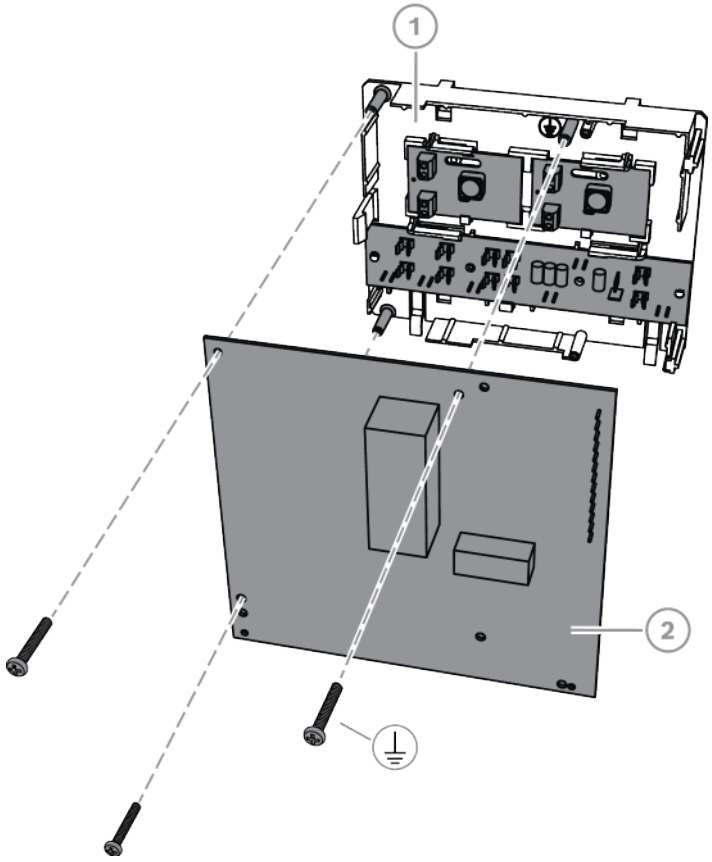


| Callout | Description |
|---|---|
| 1 | ICP-MAP0020 MAP accessory mounting plate |
| 2 | AT x000 communicator |

- Connect the AT x000 communicator to the ICP-MAP0007-2 MAP interface DE module using the supplied ICP-MAP0154 MAP ribbon cable.

The MAP ribbon cable is supplied with the MAP interface DE module.
The ribbon cable is used for all connections of the communicator input lines and for the "Communicator Trouble" and "Negative Acknowledgment" communicator signals. If additional signals are required for the communicator, e.g. area x armed / disarmed, these can be provided as a point-to-point connection between the MAP5000 panel and communicator.

**Notice!**
The analog AT x000 requires 12 V. Use the ribbon cable connector labeled **AT x000 Uext**.
The analog AT x000 also requires a separate 12 V power source, such as the ICP-MAP0017 MAP 12V-28V power converter.

**Analog AT x000 to DE module connections**

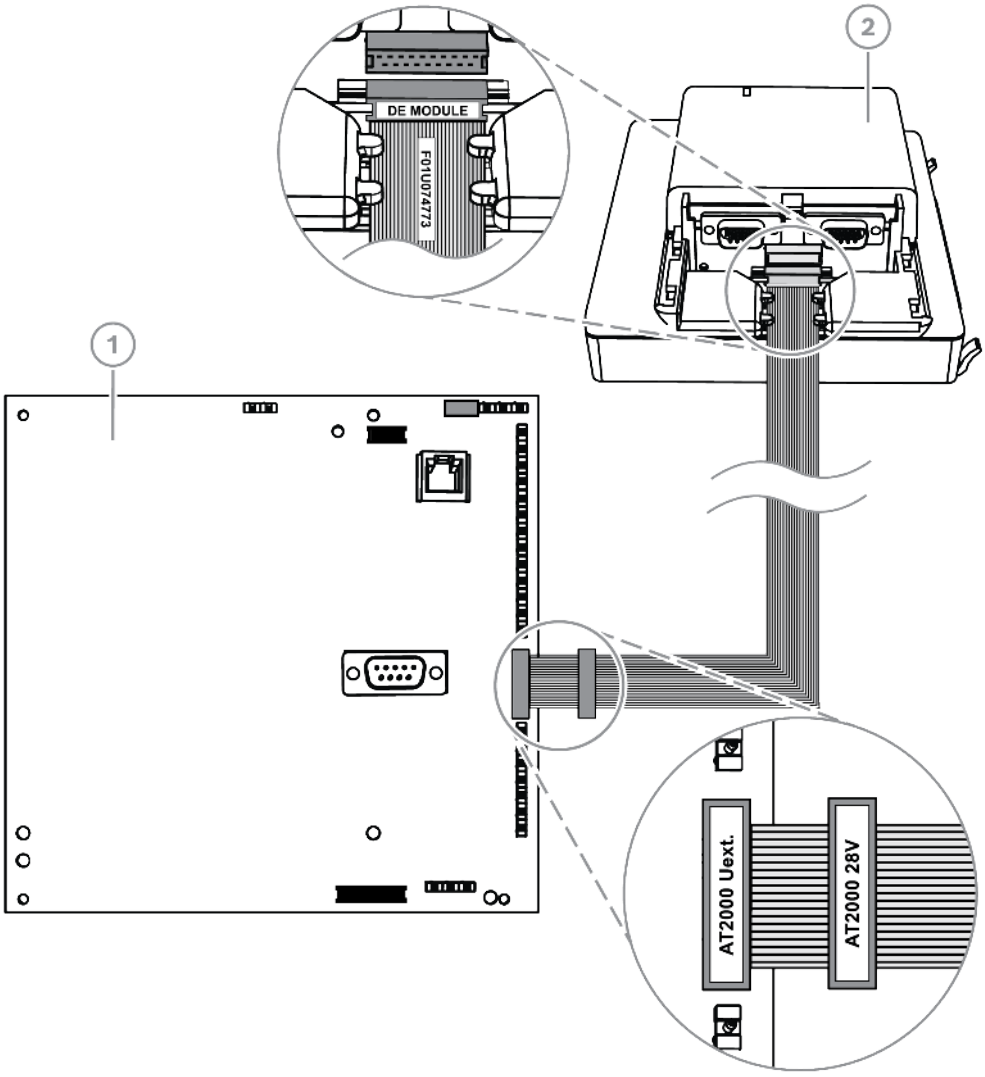


| Callout | Description |
|---|---|
| 1 | AT x000 communicator |
| 2 | ICP-MAP0007-2 MAP DE interface module |

**Notice!**
The two trouble inputs are automatically configured to "Communicator Trouble" and "Negative Acknowledgment" when "Communicator" is selected in the Remote Programming Software for MAP (RPS for MAP).

**Analog AT x000 to the power converter connections**

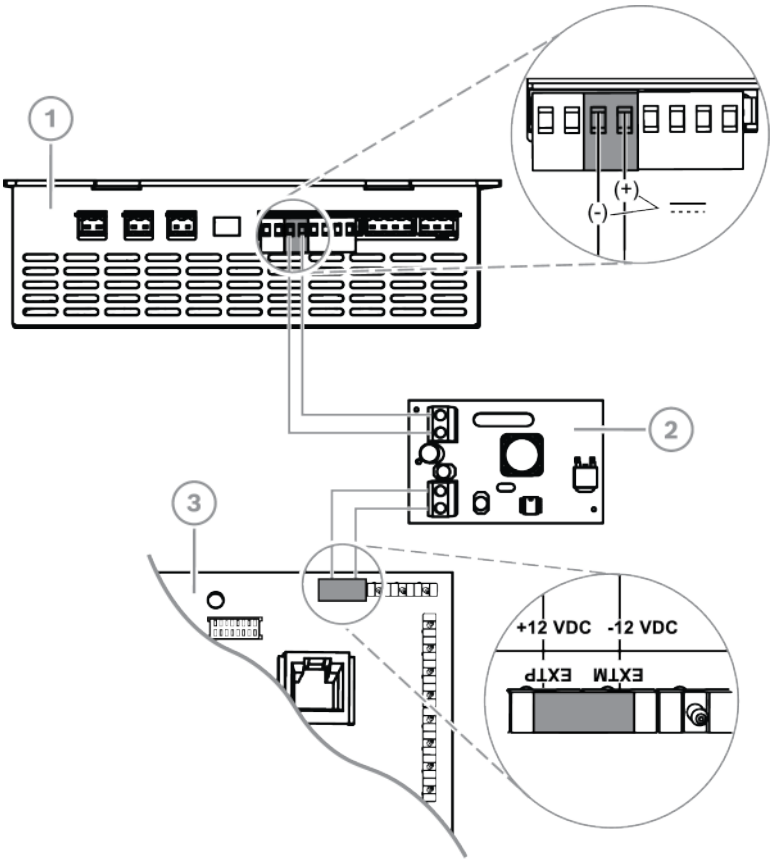


| Callout | Description |
|---|---|
| 1 | IPP-MAP0005-2 MAP power supply 150W |
| 2 | ICP-MAP0017 12 MAP 12V-28V power converter |
| 3 | AT x000 communicator |

## 3.13 Installing the hinged mounting plate

- Install the ICP-MAP0025 hinged mounting plate inside the enclosure ICP-MAP0111 or ICP-MAP0120.

**Installing the hinged mounting plate**

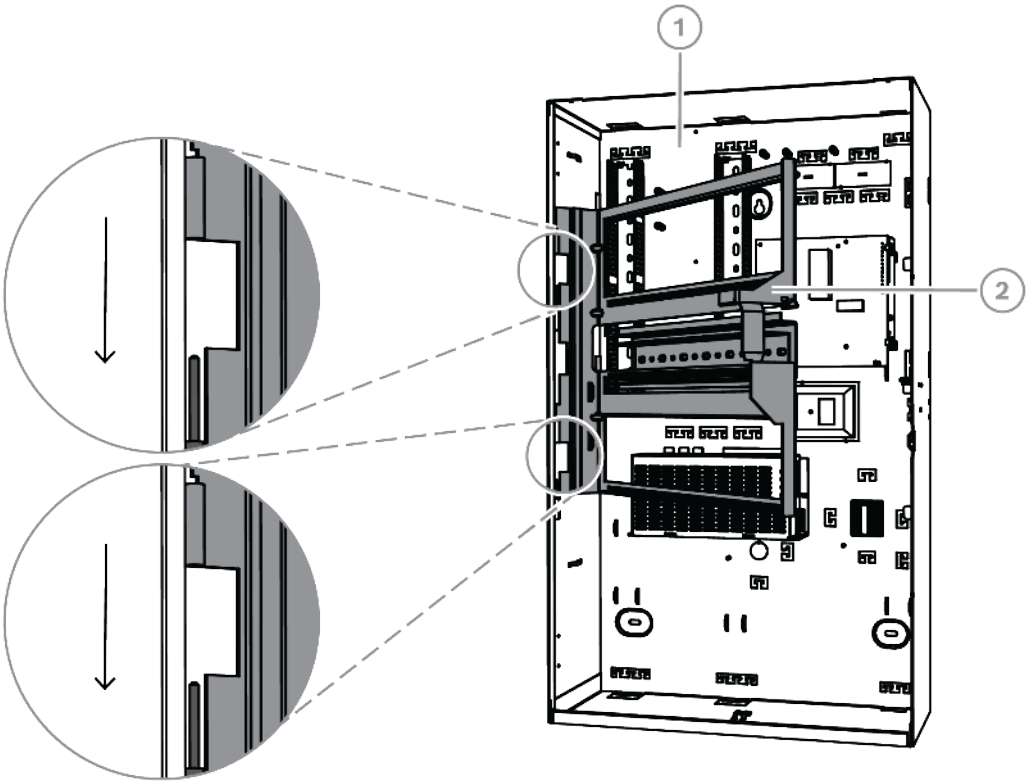


| Callout | Description |
|---|---|
| 1 | ICP-MAP0111 MAP panel enclosure |
| 2 | ICP-MAP0025 MAP hinged mounting plate |

## 3.13.1 Mounting the modules onto the hinged mounting plate

**Hinged mounting plate overview**

The following graphic shows an overview of the hinged mounting plate and the designated mounting locations of the modules.

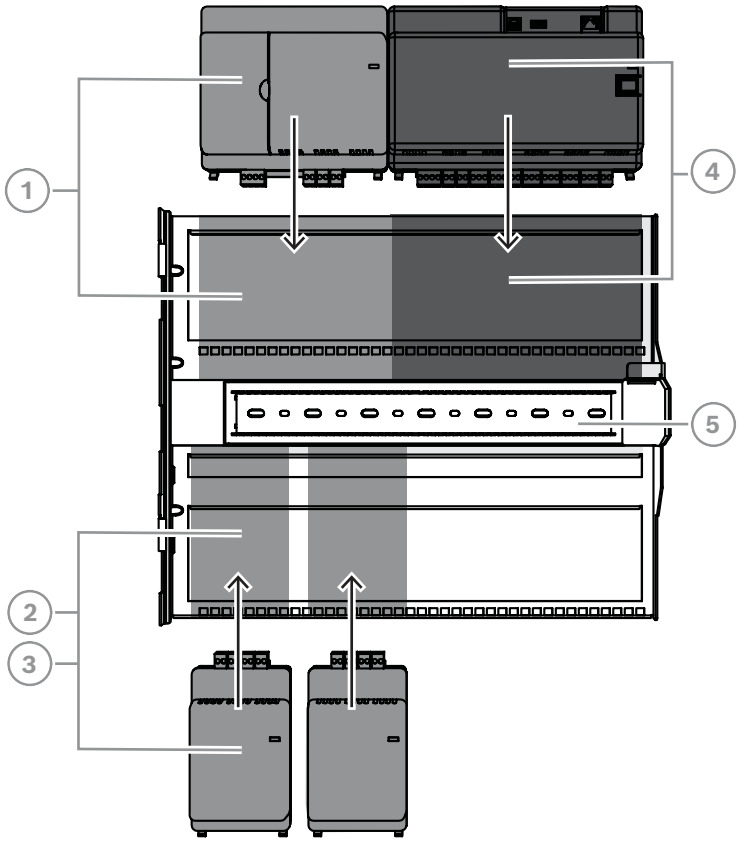


| Callout | Description |
|---|---|
| 1 | ICP-MAP0007-2 MAP DE interface module |
| 2 | ICP-MAP0010 MAP LSN gateway |
| 3 | ICP-MAP0012 MAP BDB/CAN splitter |
| 4 | MAP5000 panel |
| 5 | ICP-MAP0025 MAP hinged mounting plate |

**Sliding the module onto the hinged mounting plate**

1. Slide the module onto the hinged mounting plate.
2. Ensure that the locking clips snap into a pair of rectangular openings on the bottom rail.

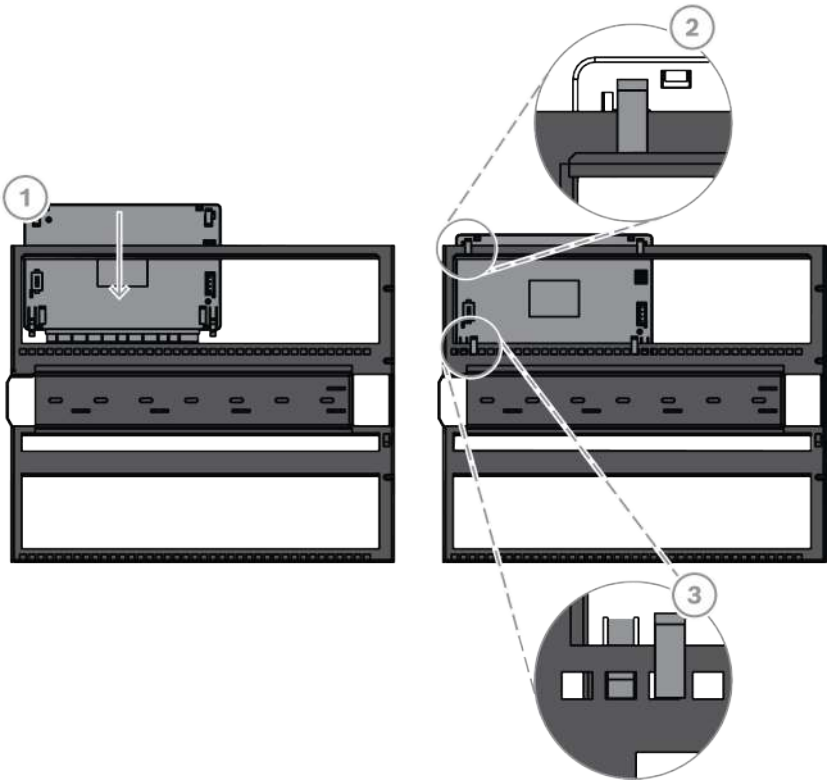


**Connecting the grounding cable to the hinged mounting plate**

- Connect the grounding cable from the enclosure back wall to the hinged mounting plate.

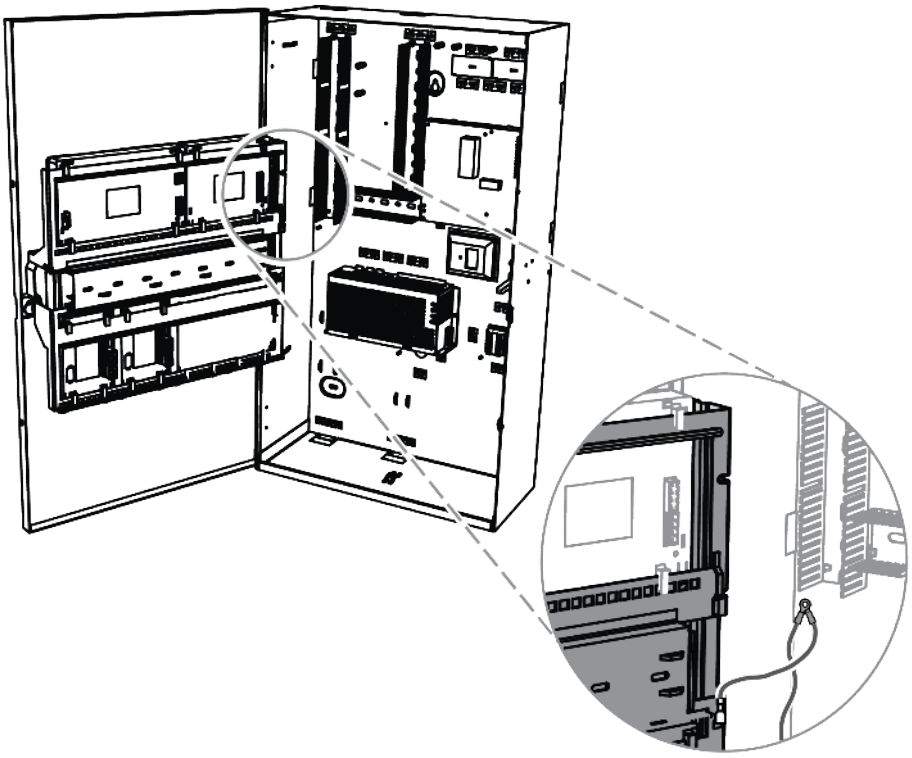

### 3.13.2 Mounting the MAP5000 panel on the hinged mounting plate

**How to mount the MAP5000 panel**

The MAP5000 panel is mounted on the hinged mounting plate.

For information on how to mount modules on the hinged mounting plate, refer to *Mounting the modules onto the hinged mounting plate, page 36*.

### 3.13.3 Mounting the Ethernet cable

**Ethernet cable**

The Ethernet cable is used to provide a connection via the MAP5000 REST-API to a management system.

The Ethernet cable can alternatively be used for IP communication if one of the following MAP5000 panels is installed:

- MAP5000 panel com (ICP-MAP5000-COM | ICP-MAP5000-COM/3)
- MAP5000 panel small com (ICP-MAP5000-SC | ICP-MAP5000-SC/3)

For IP communication via an integrated IP communicator the following protocols are available:

- VdS 2465-S2
- SIA DC-09 (TCP/IP and UDP/IP)
- Conettix IP

**How to mount the Ethernet cable**

1. Feed the Ethernet cable through the large snap ferrite sleeve (supplied in the accessory pack of the MAP5000 panel) with an additional turn.
2. Position the ferrite core as close as possible to the enclosure knockout inside the enclosure.

**Ferrite core**

## 3.14 Installing the relay module

The ICP-COM-IF2 relay module can be mounted on the hinged mounting plate or the mounting rails of the MAP panel enclosure.

A clearance of approx. 15 mm is required on either side for subsequent wiring. The terminal plugs can be unplugged laterally.

1. Attach the carrier plate of the ICP-COM-IF2 relay module in the holes provided in the hinged mounting plate or the mounting rails.
2. Use the screw provided to secure the carrier plate to the bottom rail.

**Installing the ICP-COM-IF2 relay module**

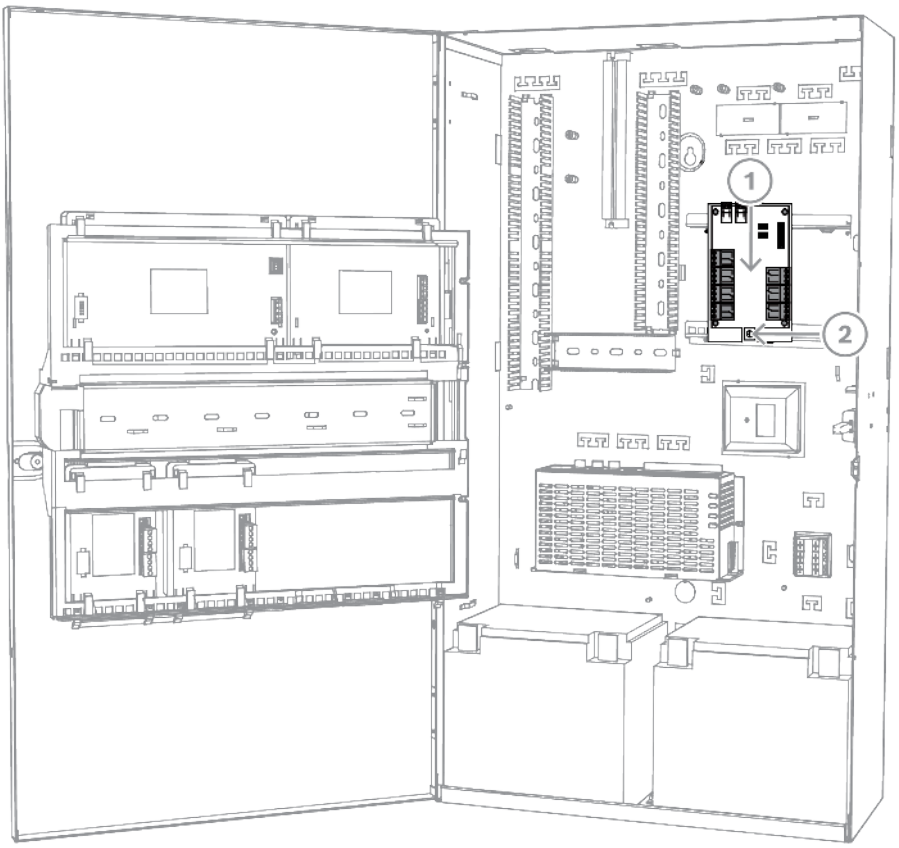


## 3.15 Installing and connecting the supported GSM modem

The ITS-MAP0008 wireless modem is used for wireless transmission of data via GSM/GPRS. The wireless modem can only be used when one of the following MAP5000 panels is installed:

– MAP5000 panel com (ICP-MAP5000-COM | ICP-MAP5000-COM/3)
– MAP5000 panel small com (ICP-MAP5000-SC | ICP-MAP5000-SC/3)

The wireless modem is designed to provide the interface to GSM network to the MAP5000 panel in order to realize an integrated dual-path SPT / DP3 with MAP5000 panel according to EN 50131-10 and EN 50136-2.

The wireless modem is not capable of working as a standalone SPT (Supervised Premises Transceiver) without the connection to the MAP5000 panel.

**How to install and connect the wireless modem**

The wireless modem is mounted on the enclosure back wall by means of two screws (supplied with the enclosure).

1. Insert the SIM card. Slide the card in from the top fully (card holder on the rear side of the wireless modem) until it clicks into place. Pay attention to the insertion direction.
2. Using the cable ICP-MAP0152, connect the 9-pin SUB-D plug to the COM 1 connection of the ICP-MAP0007-2 DE module (not supplied).
3. Connect the antenna to the FME female connector of the wireless modem.
4. Connect the black-red cable at output A or B of the power supply (terminal B = black, terminal R = red), in addition to existing wires where appropriate.
5. Mount the small snap ferrite sleeve (contained in the accessory pack of the MAP5000 panel) on the black-red cable of the wireless modem close to the wireless modem.

**Warning!**
In order to avoid data loss on the SIM card, the wireless modem must be de-energized before inserting or removing the SIM card.

**Installing and connecting the wireless modem**

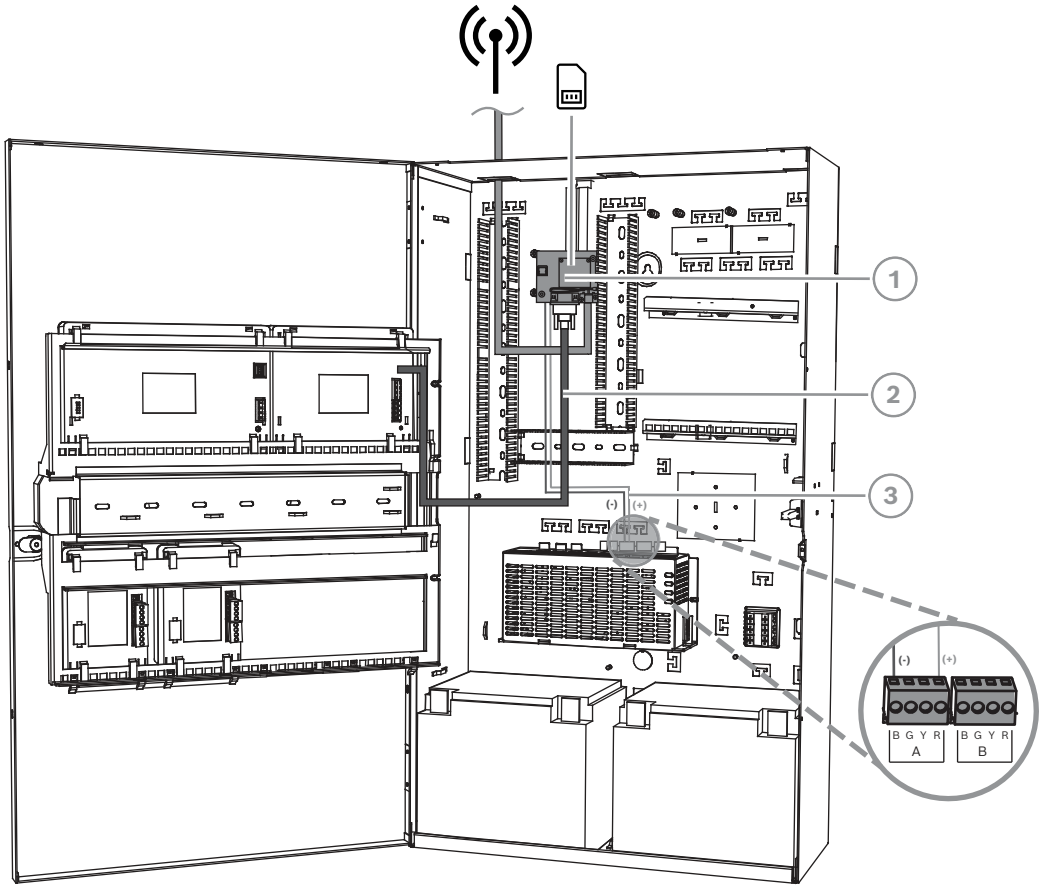


| Callout | Description |
|---|---|
| 1 | ITS-MAP0008 wireless modem |
| 2 | ICP-MAP0152 Serial cable |
| 3 | Power cable from wireless modem to the power supply |

**LED operating status**

| LED mode | Operating status of M terminal |
|---|---|
| Permanently off | M terminal is in one of the following modes:<br>– Power down<br>– Alarm<br>– Non-cycling sleep<br>– Cyclic sleep with no temporary wake-up event1 in progress |
| 600 ms on, 600 ms off | Limited network service due to one of the following: |

| LED mode | Operating status of M terminal |
|---|---|
| | – No SIM card inserted<br>– No PIN entered<br>– Network search in progress<br>– Ongoing user authentication<br>– Network login in progress |
| 75 ms on, 3 s off | Idle mode: The mobile is logged to the network (monitoring control channels and user interactions). No call in progress. |
| 75 ms on, 75 ms off, 75 ms on, 3 s off | One or more GPRS contexts activated. |
| 500 ms on, 25 ms off | Packet switched data transfer in progress. |
| Permanently on | Depending on type of call:<br>– Voice call: Connected to remote party<br>– CSD call: Connected to remote party or exchange of parameters while setting up or disconnecting a call |

## 3.16 Antennas

| **Magnetic antenna mast incl. bottom**[1] | |
|---|---|
| 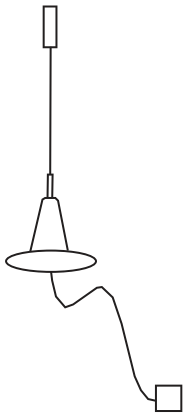 | Transmission frequency: 900 / 1800 MHz<br>Impedance: 50 Ω<br>Gain: 0 dBi<br>Max power: 10 W<br>Radiator length: 100 mm<br>Foot: 34 mm |
| Magnetic antenna mast incl. bottom with 2.6 m cable. The FME female connector is preconfigured on the coaxial cable. | |
| **Rod antenna** | |

| | |
|---|---|
| 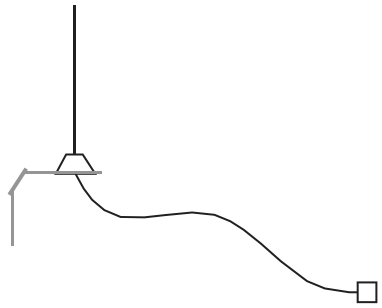 | Transmission frequency: 900 / 1800 MHz<br>Impedance: 50 Ω<br>Gain: 3.5 dBi (without cable)<br>Max. power: 20 W<br>Radiator length: 250 mm<br>Distance radiator-installation surface: 150 mm<br>Area of use: inside, outside |
| Rod antenna incl. 20 m cable.<br>The mounting bracket is designed for mounting on vertical surfaces, the FME female connector is preconfigured | |

1) not for VdS

# 4 Connections

**Caution!**
Wiring
Pinching of the wires is possible due to incorrectly hinged components.

- Ensure that there is sufficient slack in the service wire loop to allow proper movement of the hinged mounting plates.
- Ensure that the wiring to and from components on the hinged bracket is properly secured to the hinged mounting plates.
- Ensure strain relief by means of the T cutouts.

**Permitted LSN cable types**
For all MAP5000 system LSN components and for all LSN connections, only shielded cables are permitted.
- Ensure to connect the shield to the grounding studs.
- Cable requirements: 0.6 mm - 1.0 mm (18 AWG - 22 AWG) solid or stranded (for example, J-Y(St)Y 2 x 2 x n), up to 1000 m cable length.

**Caution!**
Wrong cable type
Using a wrong cable type can lead to malfunction of the system.

**Notice!**
Use shielded cables only.

## 4.1 Connecting the Bosch Data Bus

To assist with cable connections, the terminal blocks on each system module are color-coded.

**Terminal block color codes**

| Color | Description |
|---|---|
| White | Auxiliary power |
| Black | AC / battery |
| Blue | Inputs / tamper / Thermistor |
| Orange | Outputs |
| Yellow | Supported printer (ICP-MAP0007-2 only) |
| Brown | LSN data (ICP-MAP0010 only) |
| Green | Bosch Data Bus (BDB) |

**Connecting the BDB**
1. Connect the system modules via the BDB.
2. Always use the MAP5000 panel as the first module on the BDB. The 120 ohm end terminator is already installed on every BDB.

3. Connect a 120 ohm end terminator to the last module on each BDB.

**Internal BDB connections**

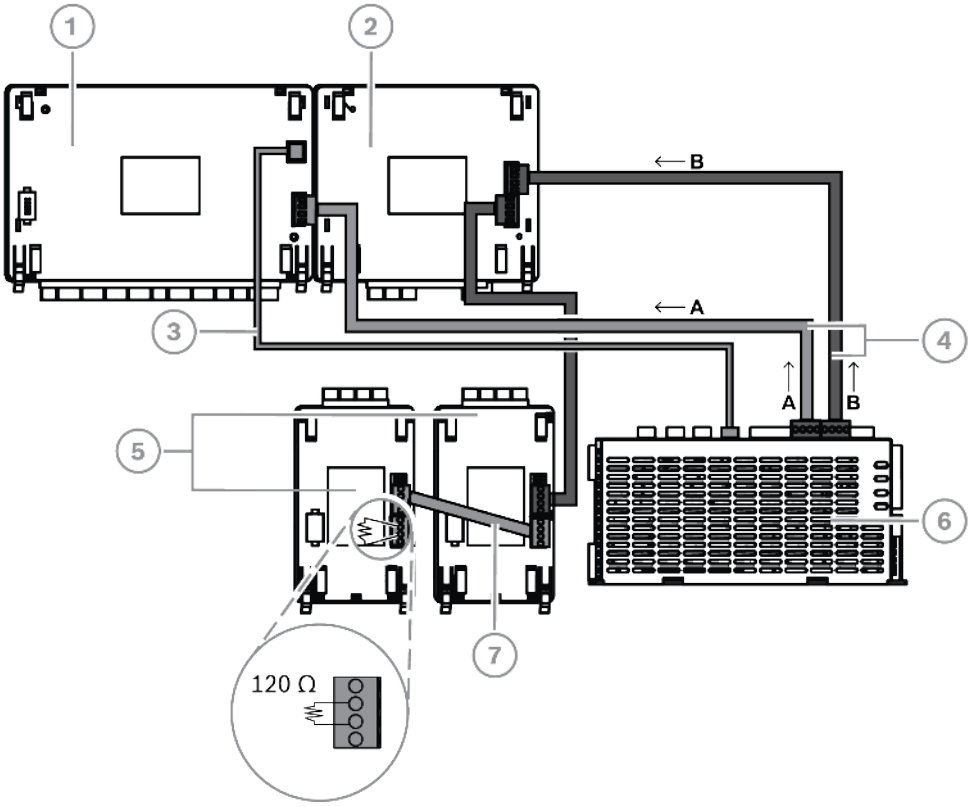


| Callout | Description |
|---|---|
| 1 | MAP5000 panel |
| 2 | ICP-MAP0007-2 MAP DE interface module |
| 3 | ICP-MAP0146 Panel power cable |
| 4 | ICP-MAP0132 Data bus cable, long |
| 5 | ICP-MAP0010 LSN gateway or ICP-MAP0012 MAP BDB/CAN splitter |
| 6 | IPP-MAP0005-2 MAP power supply 150W |
| 7 | ICP-MAP0134 Data bus cable, short |

**Notice!**
The order of system modules on the BDB shown in the figure is not mandatory. A symmetrical load distribution to the power supply outputs A and B must be ensured as far as possible.

**Bosch Data Bus cable routing**

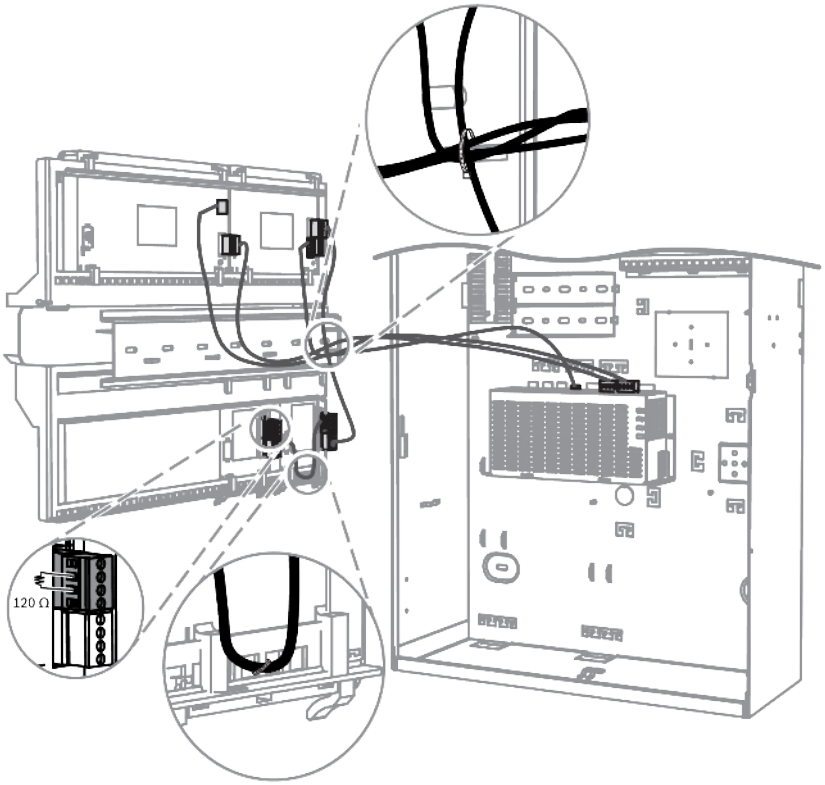


## 4.1.1 Internal / external Bosch Data Bus

The MAP5000 system contains two Bosch Data Buses (BDB), which are used to connect the system modules to the MAP5000 panel.

**Internal BDB**

The maximum length of the internal BDB is 3 m.
It is used for connecting the MAP5000 panel and other modules in the MAP panel enclosure (*Internal BDB connections, page 45*).

**External BDB**

The maximum length of the external BDB is 1000 m from the MAP5000 panel.
It is used for connecting system modules in remote operation.

**Requirements for BDB wiring**

There are no special requirements concerning the following:
- Solid or stranded
- Twisted or untwisted
- Shielded or unshielded

The minimum wire diameter is determined on the basis of the required cable length:
- 0.6 mm up to 450 m
- 0.8 mm up to 750 m
- 1.0 mm up to 1000 m

**Modules on the BDB**

| System module | Internal BDB | External BDB |
|---|---|---|
| ICP-MAP0007-2 MAP DE interface module | X | |
| ICP-MAP0010 MAP LSN gateway | X | X[1] |

| | | |
|---|---|---|
| ICP-MAP0012 MAP CAN-splitter | | X |
| IPP-MAP0005-2 MAP power supply 150W | X | X |
| IUI-MAP0001-3 \| IUI-MAP0002-3 MAP touch keypad | X[2] | X[2] |

[1]When one or more MAP LSN gateways are operated remotely, there must be one MAP power supply (IPP-MAP0005-2) installed in the same MAP expansion enclosure.
[2]The following applies for VdS: Touch keypads for different areas must not be connected on the same BDB.

### 4.1.2 Topology of the external Bosch Data Bus

- Mount the external BDB as shown below.

**Notice!**
Any other bus topology does not conform to the specifications of the BDB.

**BDB wiring without consideration of the power supply**

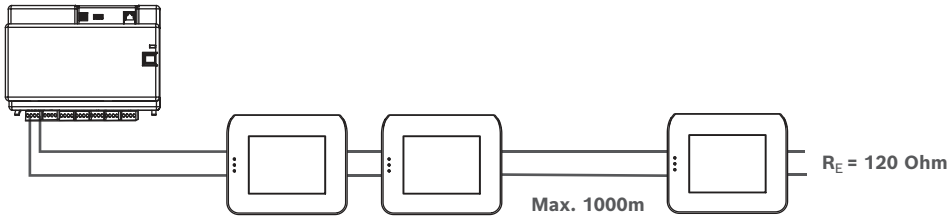


## 4.2 Connecting the power supply

### 4.2.1 Power supply connections

1. Connect the MAP terminal block to the MAP power supply.
2. Connect the MAP power supply to the MAP5000 panel using the supplied four-pin connector cable.

**Connecting the power supply**

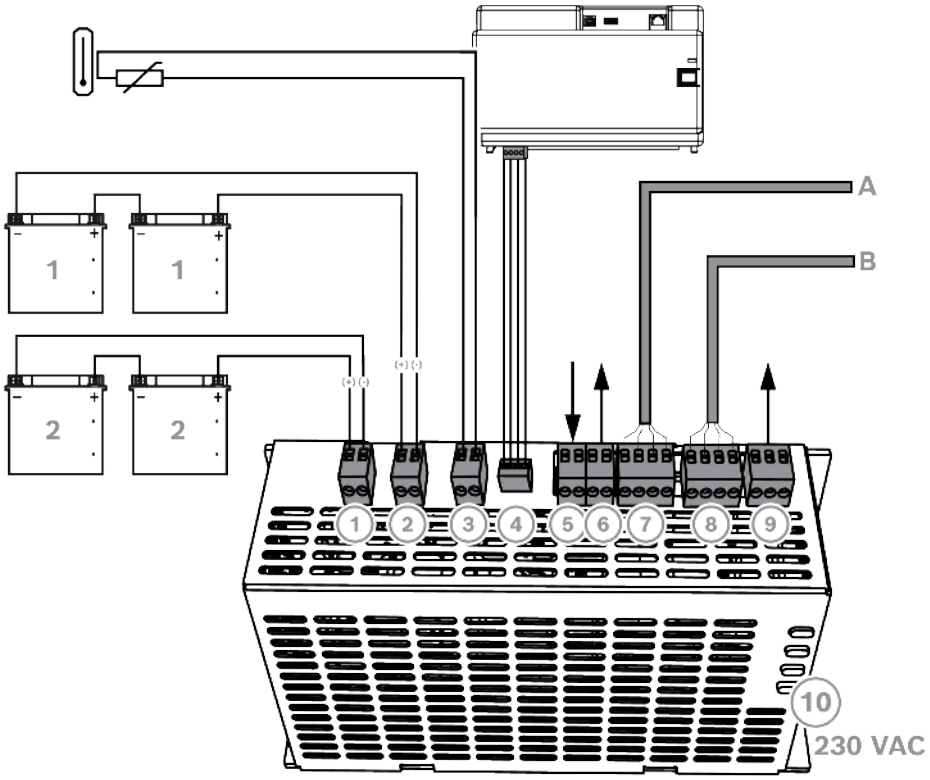


| Connection | Description |
|---|---|
| 1 | Battery circuit 2 |
| 2 | Battery circuit 1 |
| 3 | Connection for thermistor |
| 4 | Power connection to MAP5000 panel |
| 5 | Input for tamper switch, is activated by configuration for remote operation of the power supply on the external BDB. |
| 6 | Output for voltage supply (switched), supervised, nominal voltage 24 VDC |
| 7 | Bosch Data Bus - connection A |
| 8 | Bosch Data Bus - connection B |
| 9 | Output for AC fail and summary power supply trouble (optional) |
| 10 | AC connection |

## 4.2.2 Optional power supply connections

1. Connect the auxiliary DC power for the power converter.
2. Connect the supervision outputs. The supervision outputs monitor AC mains failure and summary power supply trouble.

**Optional power supply connections**

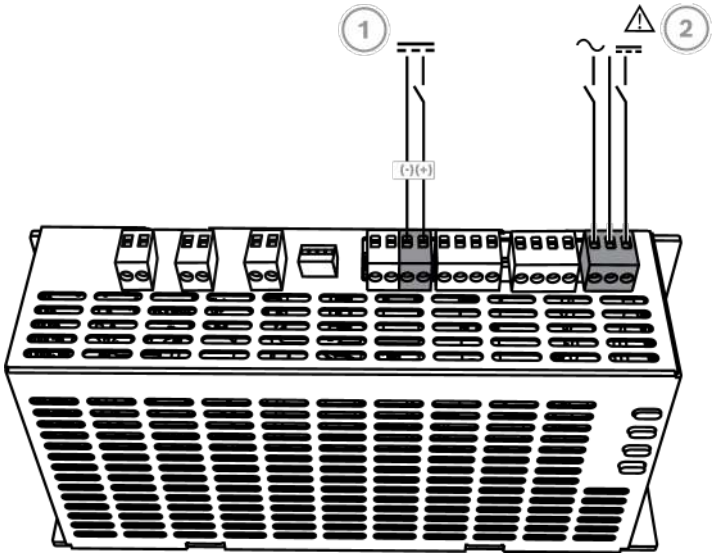


| Connection | Description |
|---|---|
| 1 | Output for ICP-MAP0017 MAP 12V-28V power converter |
| 2 | Output for AC fail and summary power supply trouble (optional) |

## 4.3 Connecting the MAP5000 panel

This chapter describes the connection of the MAP5000 panels.

**Connection strip of the MAP5000 panel**

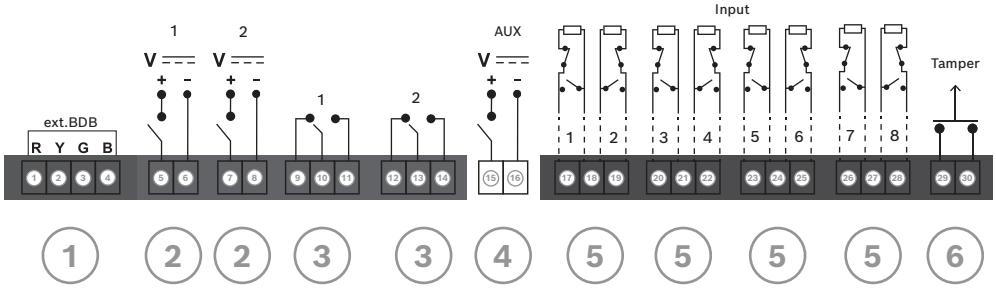


| Connection | Description |
|---|---|
| 1 | External BDB connector |
| 2 | Programmable output (28 VDC / 1 A) |
| 3 | Programmable dry relay output (toggle switches) |
| 4 | Output AUX (28 VDC / 1 A) |
| 5 | Supervised inputs |
| 6 | Input for MAP panel tamper switch |

**External BDB connector (1)**

- Use this connection to connect additional system modules to the external BDB (refer to *Connecting the Bosch Data Bus, page 44* and *Modules on the BDB, page 46*).

**Programmable output (2)**

- Use these connections to control devices in certain system states (refer to *Programmable output signals, page 66*).

**Programmable dry relay output (3)**

- Use these connections to control devices such as self-powered signaling devices in certain system states (*Programmable output signals, page 66*).

**Output AUX (4)**

- Use this connection to supply voltage to devices the MAP5000 panel. The voltage can be switched on/off in certain system states.

**Supervised inputs (5)**

- Use these inputs to connect supervised conventional detectors or key switches RE = 12.1 kOhm (refer to *Point types and point evaluation, page 66*).

**Input for MAP panel tamper switch (6)**

- Use this input to connect the tamper switch of the MAP5000 panel (refer to *Connecting the ICP-MAP0050 tamper switch, page 58*).

## 4.4 Connecting DE module

**ICP-MAP0007-2 MAP DE interface module connections**

1. If a supported printer is used, connect the printer to the DE module.
2. Connect the supervised sirens and strobes to the DE module outputs.

**Connecting the DE module**

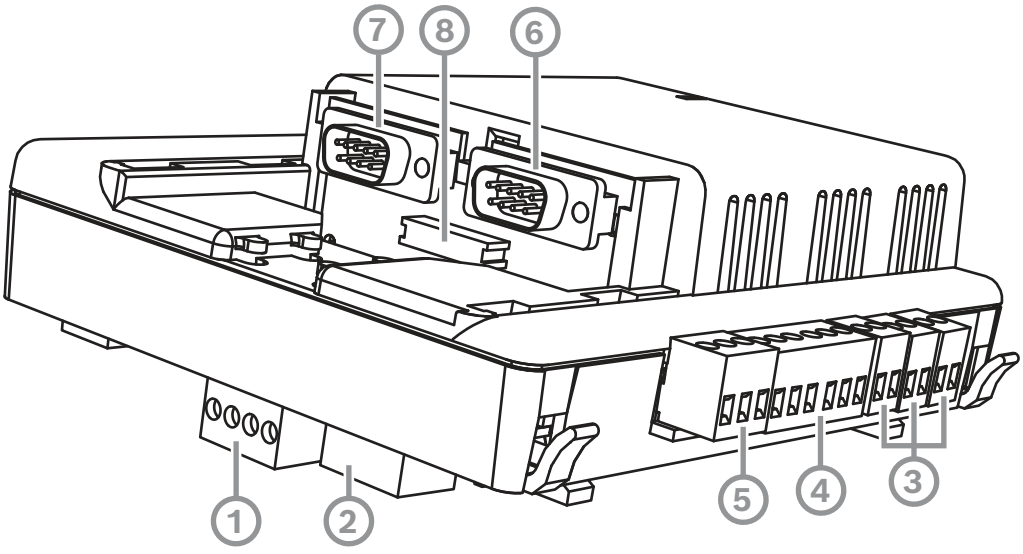


| Callout | Description |
|---|---|
| 1 | Bosch Data Bus |
| 2 | Bosch Data Bus |
| 3 | Outputs (supervised) |
| 4 | COM2 20mA interface |

| | |
|---|---|
| 5 | Outputs (open-collector) |
| 6 | COM2 RS232 interface |
| 7 | COM1 RS232 interface |
| 8 | S1 Parallel interface (Ribbon Cable Connector) |

## 4.5 Connecting the LSN gateway

**Notice!**
When connecting an LSN component, ensure that you follow local standards and guidelines when planning the system installation.
The following applies for VdS systems: Each area must be supplied with power independently. The outputs AUX1 and AUX2 on the LSN gateway (for max. two areas) or the voltage outputs of the fuse plate (SIV) (for additional areas) are available for this purpose.

**Shielded LSN stub and loop wiring**
For both stub and loop wiring, the following additional requirements apply for shielded wires:
– Usage of an additional shielding wire from the MAP panel enclosure
– Routing across the shortest possible distance to the earth terminal
– Looping the shield wire through the LSN elements
Other connections of the additional shielding wire at other locations are not permitted. With loop wiring, the additional shielding wire must be connected at both loop ends.

### LSN gateway loop configuration

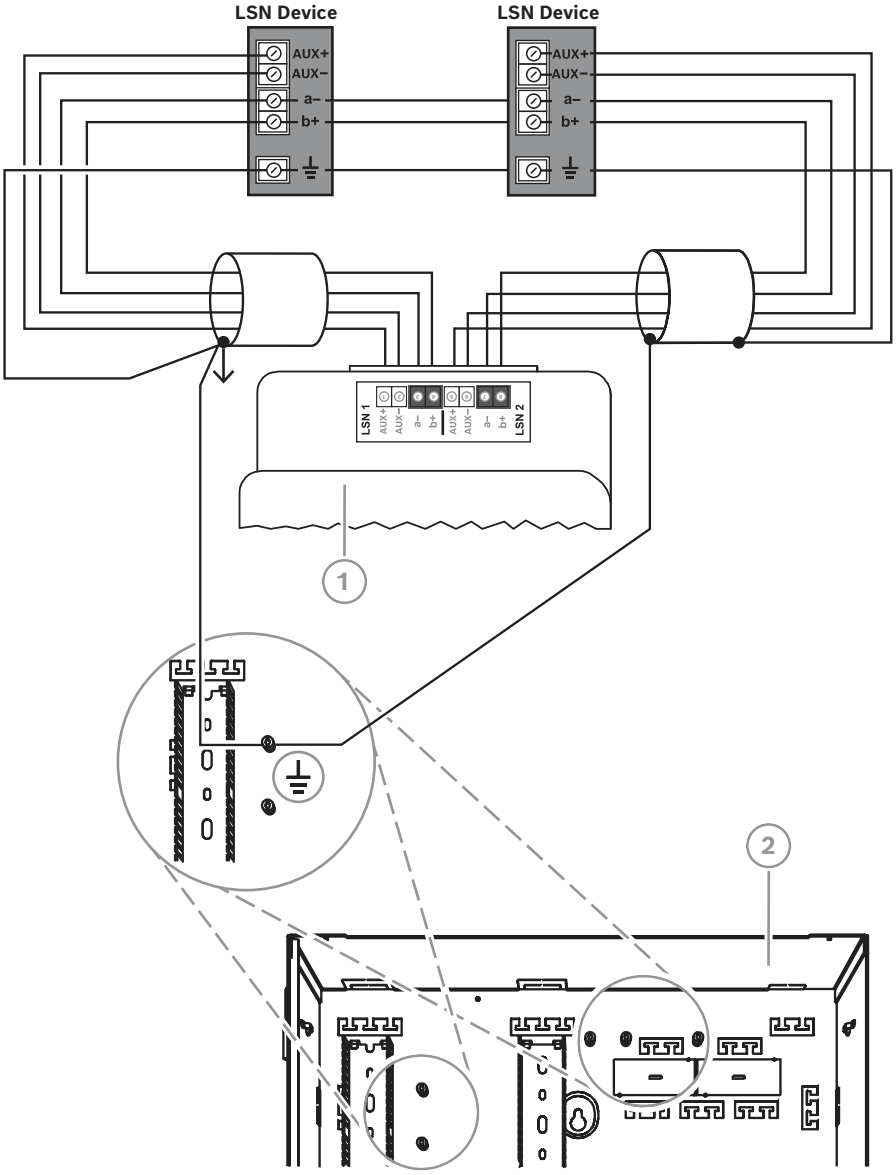

**LSN gateway stub configuration**

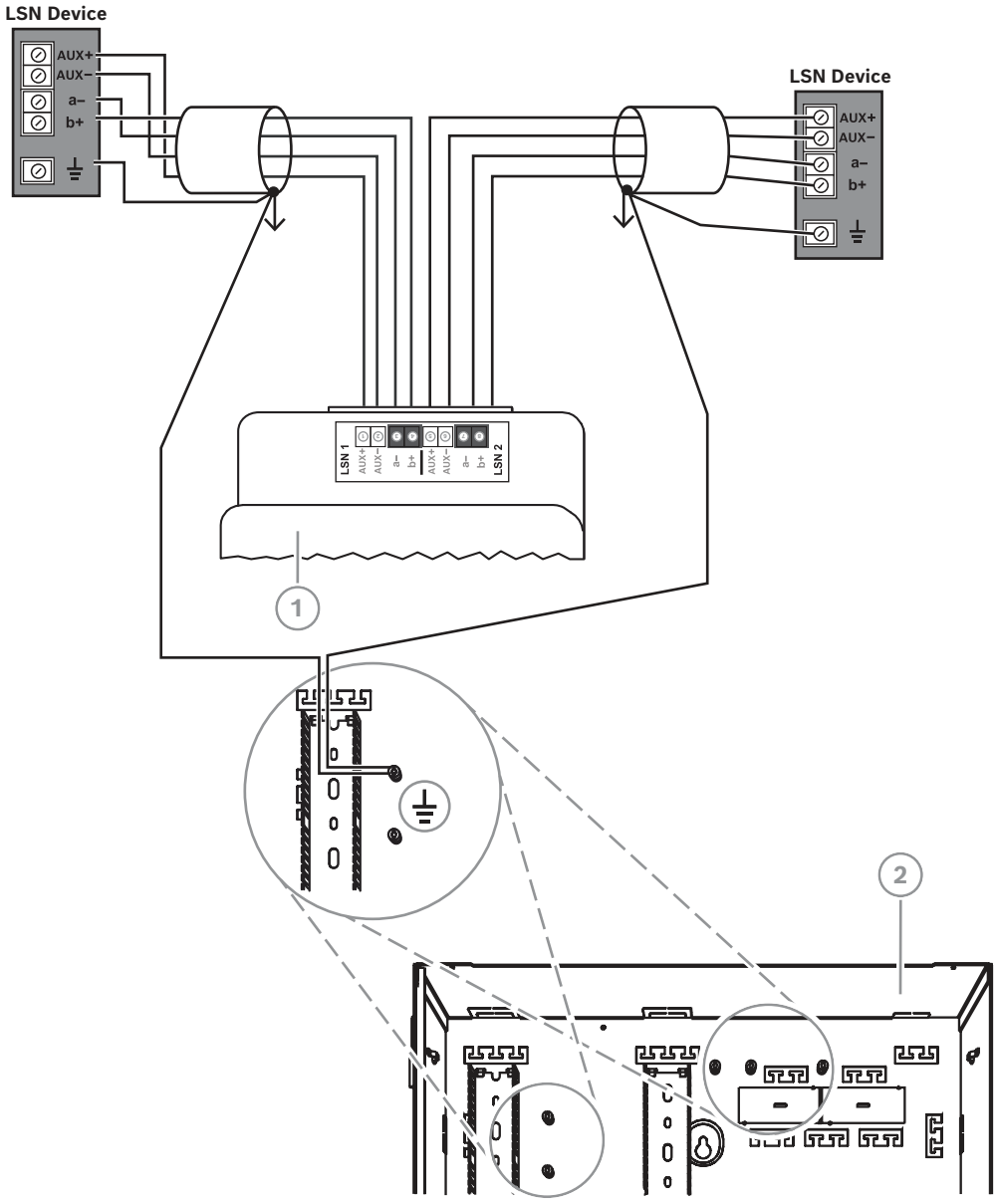


| Callout | Description |
|---|---|
| 1 | ICP-MAP0010 MAP LSN gateway |
| 2 | ICP-MAP0111 MAP panel enclosure |

## 4.6 Splitting the external BDB with a BDB/CAN splitter

The external BDB can be splitted into two independent and isolated stubs to connect touch keypads, gateways and further power supplies. This way, flexible wiring into different directions with up to 500 m cable length as well as a higher reliability can be achieved.
For information on installing a BDB/CAN splitter, refer to the correspondent installation manual and datasheet.

**BDB/CAN splitter wiring without consideration of the power supply**

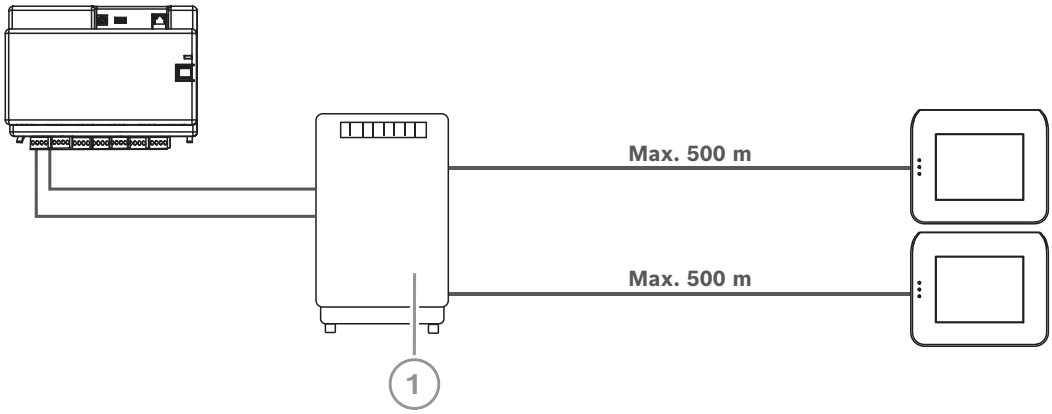


| Callout | Description |
|---|---|
| 1 | ICP-MAP0012 BDB/CAN splitter |

**Refer to**

– *Planning the system with BDB/CAN splitter, page 12*

## 4.7 Connecting the touch keypad

The BDB supports up to 32 touch keypads. The power supply of remote touch keypads can be ensured with the expansion enclosure (power supply application).

**VdS programming instruction**

- Only assign one area (where applicable with overlapping dependent partition areas) to a touch keypad.

Exception:

Mutually independent areas may be assigned to the touch keypad of the MAP5000 panel area.

**External BDB connection of the touch keypad**

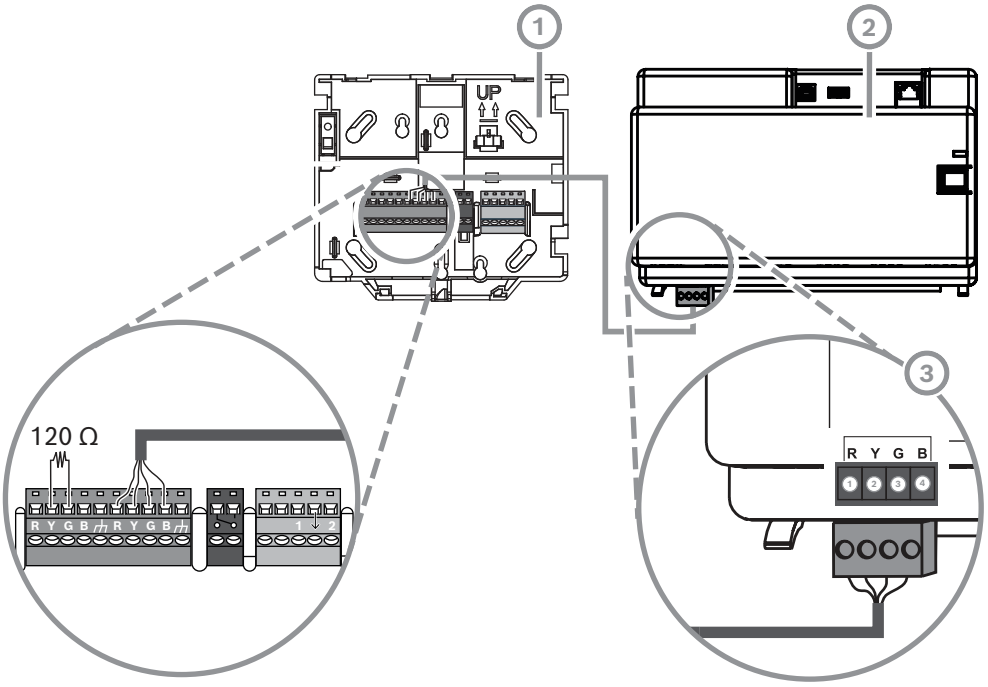


| Callout | Description |
|---|---|
| 1 | MAP touch keypad |
| 2 | MAP5000 panel |
| 3 | External BDB |

## 4.8 Installing the touch keypad

**Mounting location**

Mount the touch keypad onto the wall so that the user interface is at a comfortable level for the end user. Typical installations of the touch keypad are at shoulder level, which is approximately 150 to 160 cm (59 to 62 in) above the floor. It must be guaranteed by corresponding positioning of the touch keypad or by organizational measures that only the user has an optimum view of the touch keypad.

**Mounting the touch keypad**

1. Unlock the touch keypad base and remove the cover.
2. Use the touch keypad base to mark the holes on the mounting surface.
3. Refer to *External BDB connection of the touch keypad, page 55* for wiring instructions.
4. Replace the touch keypad cover on the base.
   The cover automatically locks to the base.
5. Secure the cover using one screw M3 x 20 mm (F.01U.172.636).
6. The fed-in cable must be provided with strain relief.
7. The adhesive seal must be attached after completion of all work.

**Opening the touch keypad**

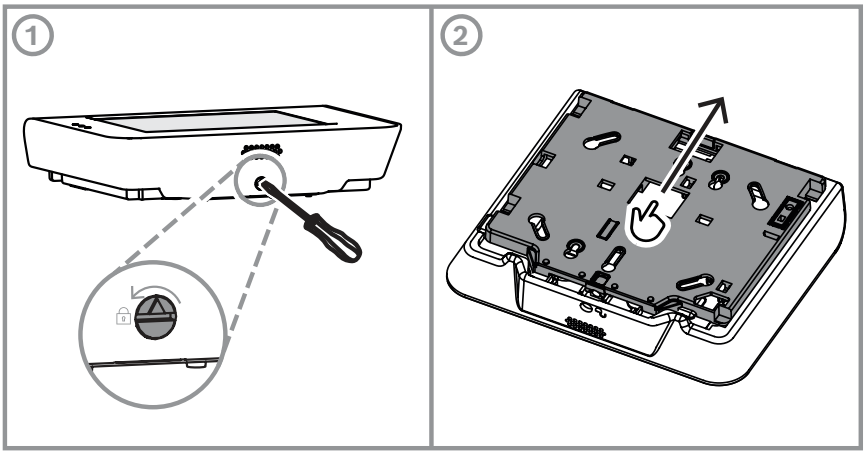


## 4.9 Installing and connecting the tamper switch

– Install the ICP-MAP0050 MAP panel/power enclosure tamper switch in the ICP-MAP0111 MAP panel enclosure.
– Install the ICP-MAP0055 MAP expansion enclosure tamper switch in the ICP-MAP0120 MAP expansion enclosure.

**Installing the tamper switch onto the rail**

- Slide the extension piece of the tamper switch to position C as shown in the figure below.
  If a wall tamper plug was installed (refer to *Mounting the enclosure, page 21*), the position of the expansion piece of the tamper switch must be chosen in a way that lifting the enclosure off the wall by > 5 mm leads to reliable activation of the tamper switch.

**Tamper switch extension piece**

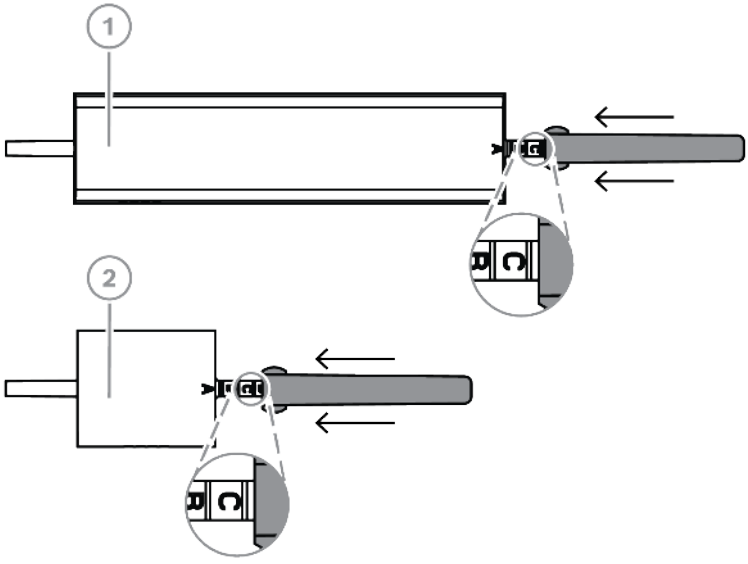


| Callout | Description |
|---|---|
| 1 | ICP-MAP0050 MAP panel/power enclosure tamper switch |

| | |
|---|---|
| 2 | ICP-MAP0055 MAP expansion enclosure tamper switch |

- Slide the tamper switch onto the rail as shown in the figure below.

**Mounting the tamper switch onto the rail**

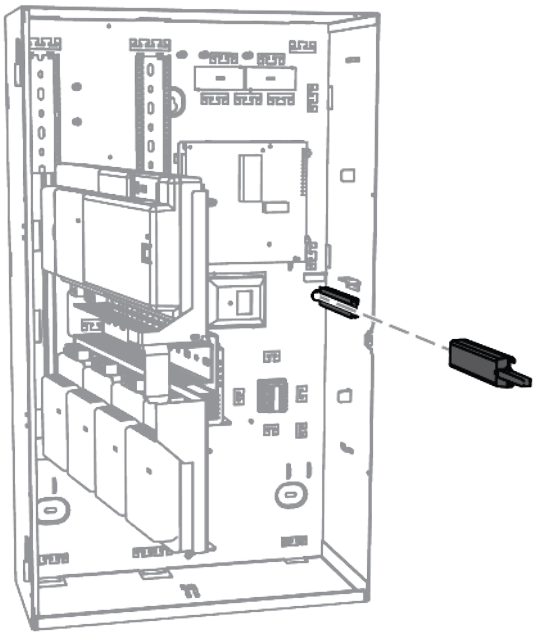

1. Clip off the connector from the cable of the tamper switch.
2. For the ICP-MAP0111 MAP panel enclosure, connect the ICP-MAP0050 MAP panel/ power enclosure tamper switch to the MAP5000 panel. Refer to *Connecting the ICP-MAP0050 tamper switch, page 58*.
3. For the ICP-MAP0120 MAP expansion enclosure, connect the ICP-MAP0055 MAP expansion enclosure tamper switch to the IPP-MAP0005-2 MAP power supply 150W. Refer to *Connecting the ICP-MAP0055 tamper switch, page 59*.

**Connecting the ICP-MAP0050 tamper switch**

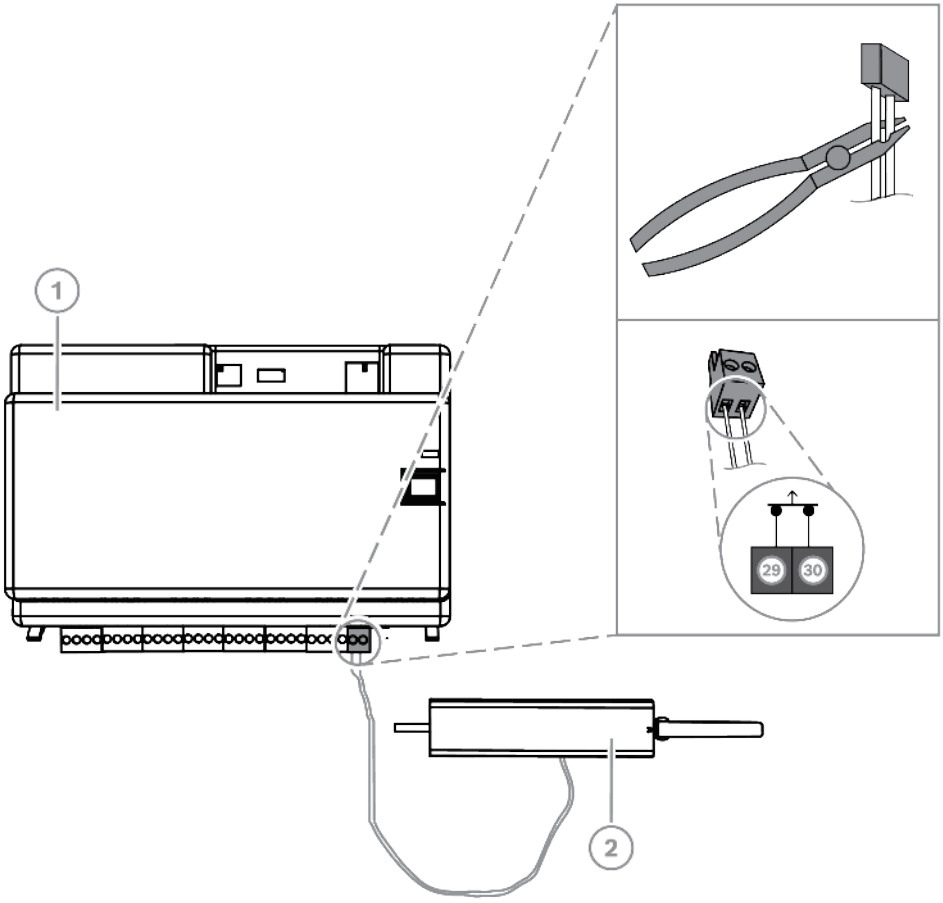


| Callout | Description |
|---|---|
| 1 | MAP5000 panel |
| 2 | MAP panel/power enclosure tamper switch |

**Connecting the ICP-MAP0055 tamper switch**

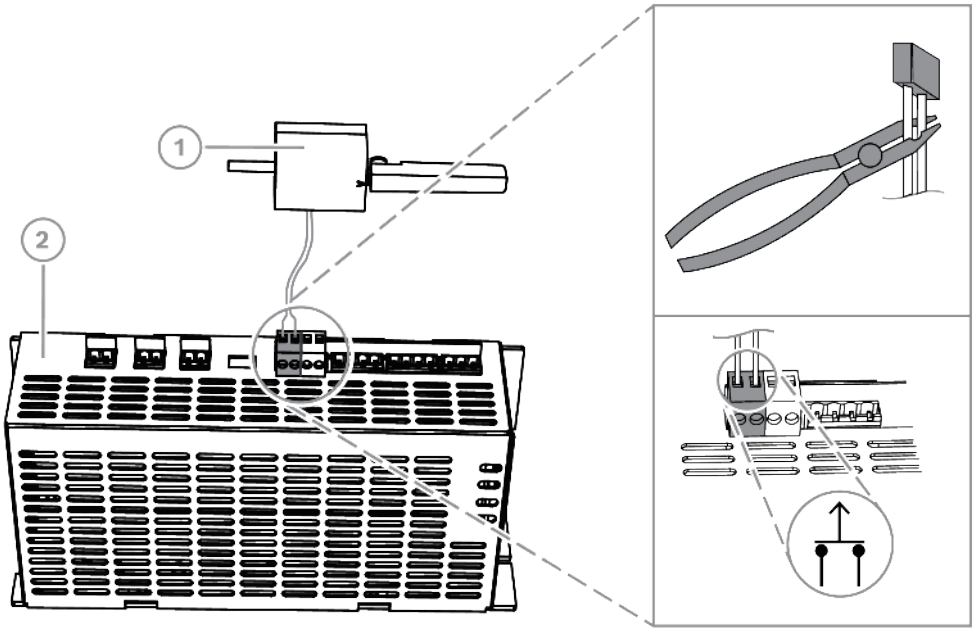


| Callout | Description |
|---|---|
| 1 | MAP5000 panel |
| 2 | ICP-MAP0055 MAP expansion enclosure tamper switch |

**Notice!**
When the enclosure door is opened, the tamper switch creates a tamper condition.
To allow for a local connection between RPS for MAP and the MAP5000 panel, connect the tamper switch to the MAP5000 panel and not the power supply.
The MAP5000 panel only allows system parameter changes via RPS for MAP if the MAP panel tamper switch input is in open state.

## 4.10 Installing the ICP-MAP0060 MAP enclosure lockset

1. Remove the lockset knockout from the enclosure door.
2. Insert the lockset into the opening on the enclosure door.
3. Secure the lockset with the nut.

- Once the enclosure lockset is installed, connect the long grounding cable to the enclosure door.

**Installing the enclosure lockset**

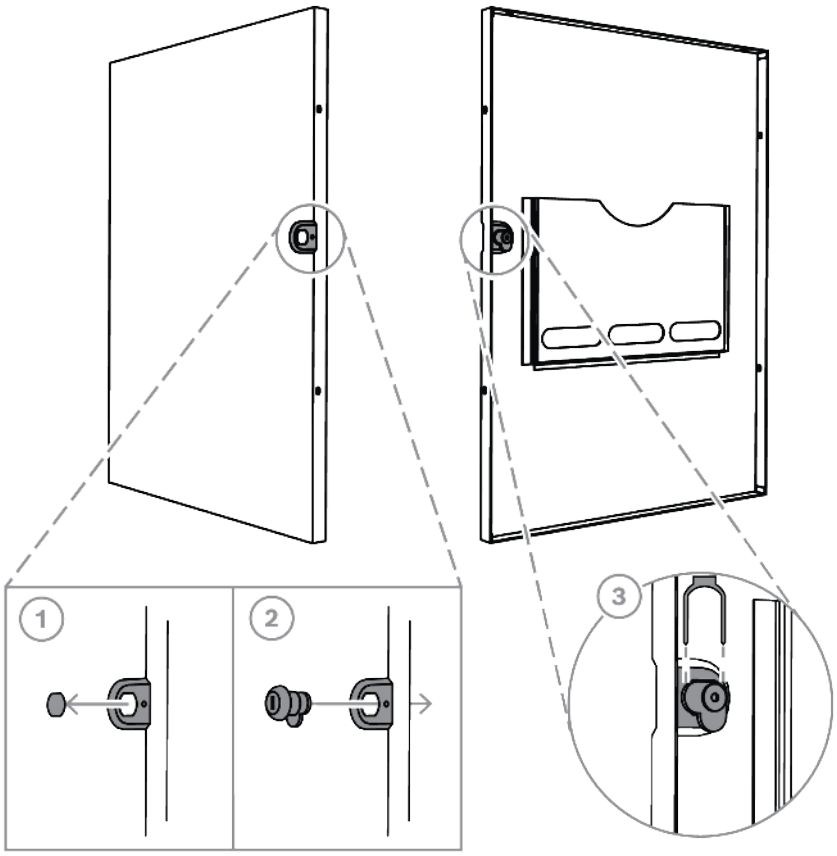


**Connecting the grounding cable to the enclosure door**

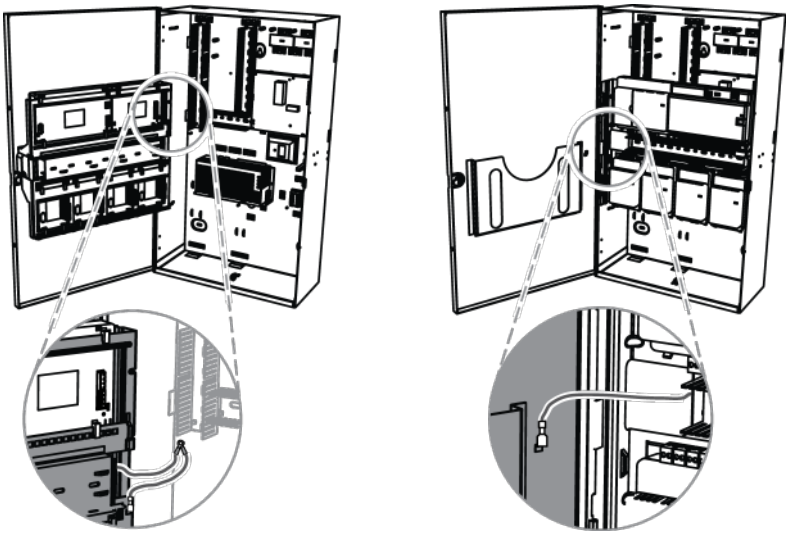

## 4.11 Final power connections

Make sure that the AC wires are connected to the MAP terminal block.

1. Connect the battery wire leads to the batteries.
   **Do not connect the batteries to the power supply at this time**.
2. Switch the AC breaker on.

3. Ensure that there are no power-related trouble conditions.

**Warning!**
Ensure that the AC LED indicator on the power supply turns on steady before you connect the battery terminal to the power supply.

**Warning!**
Remove the protective dust cover label from the top of the power supply.

## 4.12 IP Interface

**Ethernet connector**

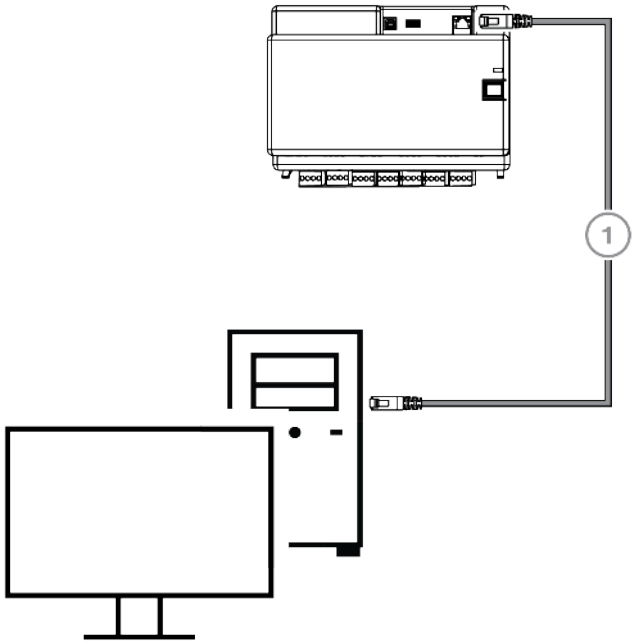


| Callout | Description |
|---|---|
| 1 | CAT5e shielded Ethernet cable (max. 100 m) |

**VdS and EN50131: The usage of the MAP5000 Ethernet interface is permitted if the following conditions are met.**

1. Use a direct connection (1:1 connection) for connecting the management system to MAP5000.
2. When using repeaters (switches), ensure that no other network components are connected to the repeaters.
3. For operation of the management system, restrict the data transfer from MAP5000 to the management system. Ensure that this does not have any influence on the panel.

**VdS and EN50131 programming instruction**
Settings in **RPS for MAP**:

- In the MAP5000 panel menu, select -> **setup: Management system as a Monitoring Station**.

**Notice!**
Data transfer between the MAP5000 and the connected PC system must always take place via a secure, authenticated and encrypted connection.

# 5 Initial set-up

First check the following before initial set-up:

- Are all cables connected correctly?
- The power supply is always in operation after the AC mains has been connected and the AC breaker switched on.

**Warning!**
Injury due to electricity
Risk of injury in the event of short circuit. Ensure the correct polarity!

**Connecting the batteries**

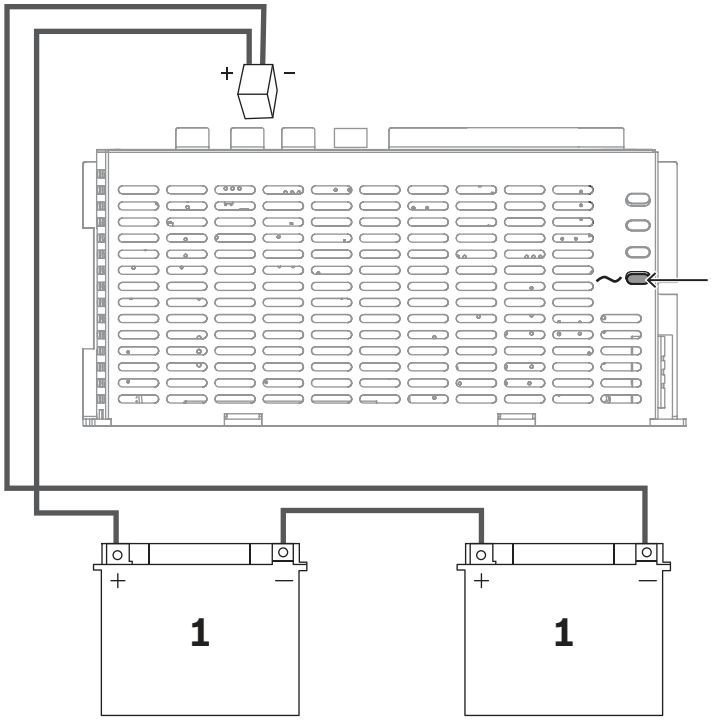


**Danger!**
Battery
Injuries due to electric shock, fire or explosion are possible if the battery is handled or connected incorrectly.

**Notice!**
Use only VdS-approved maintenance-free batteries for VdS applications.

# 6 Programming

Programming is performed with Remote Programming Software for MAP (**RPS for MAP)**. A PC or laptop with compatible Windows operating system is required for this. At least 256 MB RAM is needed. A mouse is recommended for operation of the program.

## 6.1 RPS for MAP

**Installing the remote programming software**

1. In the **RPS for MAP** installation package, start the installation process by double-clicking on the **setup.exe** file in the **RPS** directory.
2. Follow the instructions of the installer.

⇨ **RPS for MAP** will start automatically after installation has been completed successfully.

**Logging on for the first time**

The dialog box login information is displayed when the program is started for the first time after installation.

1. Enter **admin** as user name and **default** as password.
2. After successful login, change the administrator password according to the password rules.
3. Change the language if needed. To do this, change to the tab **Administration > Operators**.

**Notice!**
If you lose the access data, you can`t recover it. Only a new installation of RPS for MAP including SQL database will help to set it back to the default.
If you do this, all existing MAP5000 panel configurations are lost.

### 6.1.1 Help for the RPS for MAP

All instructions and explanations for programming are provided via the **RPS for MAP** Online Help.

**Help texts in the properties info bar**

If you mark a parameter in the **Properties** field on the **Main Page** tab, a short explanation will be displayed in the **Properties Info Bar** underneath.
Detailed information is available by pressing the F1 function key on your PC keyboard.

**Help texts in the contents overview**

The complete programming process with all operating steps is described in the contents overview.

1. Click on a book icon to open the table of contents.
2. Click on a topic icon to view the topic.

### 6.1.2 Standard-compliant programming

If you want to perform standard-compliant programming, select the following settings in **RPS for MAP** before you start programming.

1. Click on the **Menu** button and create a new MAP5000 panel account with the **New** button.
2. In the **Hardware Manager**, click on the **MAP 5000 Panel** node and then in the **Properties** field on the parameter **Default Property Values Set** and select the standard that you want to program.
3. Right-click on any parameter on the left side of the **Properties** window.

4. Select **Restore all properties using <selected standard> default property values set**. Confirm with **Yes**.

**Compliance check / validation**

During programming, you can check whether programming is compliant with the selected standard at any time.

- Click on the **Panel Validation** button.
- ⇨ Any errors found will be displayed in the **Error List** window in plain text.

## 6.2 System bundle

Fault-free operation of the MAP5000 panel can be guaranteed only if **all** system modules of the MAP5000 panel and **RPS for MAP** comply with the manufacturer's specifications.

### 6.2.1 Checking the firmware version

After first start-up, you need to check whether the firmware versions of all system modules and the **RPS for MAP** are compatible with each other (refer to MAP5000 system bundles).

1. Make a connection to the MAP5000 panel.
2. Click on the **MAP 5000 Panel** node.
   The firmware version is displayed in the **Properties** under **Control Panel Firmware Version**.
3. Click successively on the system modules in the **Hardware Manager**.
   The firmware version is shown in the **Diagnostics** under **Firmware Version**.

⇨ The version of **RPS for MAP** is displayed during start-up or under **RPS Start>RPS Options>Resources**.

### 6.2.2 Firmware updates

All system modules are updated by means of the **RPS for MAP**.

- To carry out updates, follow the instructions in the file **How to update** ... in the zip file.

### 6.2.3 Manufacturer authorization

In order to transfer new firmware to the system modules with **RPS for MAP**, a manufacturer authorization may be needed on the MAP5000 panel side.

1. Authorize the manufacturer user by a user with corresponding permissions (see operating manual, section **Manufacturer authorization**).
2. Open the MAP5000 panel enclosure.
3. Activate **Installer Mode** (*Installer button, page 71*).
4. Log on at the Installer touch keypad with the manufacturer's passcode. The passcode is a combination of the 3-digit user ID and a 6-digit password. Use the user ID **000** and password **234567** when logging on for the first time. These are entered directly in succession. The manufacturer's password can be changed after successful log-on. The password **234567** is deactivated as a result.

## 6.3 Completing the installation

1. Stick the type label supplied in the MAP5000 panel accessory pack on the MAP5000 panel enclosure at a location that is easily visible from outside.
2. Lock the enclosure door after completing all work.

**Systems in accordance with VdS class C and EN 50131**

1. On systems in accordance with VdS class C and EN 50131, screw the door closed on the lock side with two sheet-metal screws (3.5 mm x 10 mm) from the accessory pack in order to guarantee sufficient mechanical strength.
2. Fix the adhesive seal on the lock.

## 6.4 Point types and point evaluation

**Overview of the standard point types and their pre-set properties**

| Point Type | Arming state | | | Influences ready to arm status |
|---|---|---|---|---|
| | Disarmed | Internal armed | External armed | |
| Intrusion | No | Yes | Yes | Yes |
| Intrusion 24 h | Yes | No[1] | Yes | Yes |
| Hold-up* | Yes | No[1] | Yes | Yes |
| Amok | Yes | No[1] | Yes | Yes |
| Duress | Yes | No[1] | Yes | Yes |
| Tamper | Yes | No[1] | Yes | Yes |
| Bolt contact | No | No[1] | No | Yes |
| Trouble | Yes | No[1] | Yes | Yes |
| Technical | Yes | No[1] | Yes | No |
| Fire | Yes | No[1] | Yes | No |

[1] Assignment to Internal Program not possible or with no effect

* If any LSN coupler modules are used and operated in NVK mode, inputs may not be configured for hold-up alarms.

## 6.5 Output functions

### 6.5.1 Programmable output signals

The following functions can be programmed at outputs.

p = programmable

| Behavior item type | Output is activated for ... |
|---|---|
| Hold-up alarm | Hold-up (silent)<br>Hold-up (non silent) |
| Amok alarm | Amok alarm (silent)<br>Amok alarm (non-silent) |
| Duress alarm | Duress alarm |
| External intrusion alarm | Intrusion alarm from unoccupied protection area |
| Internal intrusion alarm | Intrusion alarm from disarmed area with<br>– activated internal program<br>– intrusion alarm 24h |

| Behavior item type | Output is activated for ... |
|---|---|
| Technical alarm | Technical alarm |
| External system trouble | Power supply failure (p), battery trouble |
| Internal system trouble | Power supply failure, ground fault, printer trouble |
| External intrusion trouble | Detector self test trouble |
| Internal intrusion trouble | Anti-mask trouble |
| Technical trouble | Technical trouble |
| Summary area armed | One or more areas armed externally |
| Area armed | Area x armed externally |
| Area disarmed | Area x disarmed externally |
| Area ready to arm | Area x disarmed and ready to arm |
| Internal program ON | Internal program x switched on |
| Chime | Detector has tripped chime, only if chime mode is activated |
| Monitor (output follows Input) | Shows the actual status of the input: normal / active |
| Report failure MAP5000 panel alarm (V1.2x) | MAP5000 panel has received negative acknowledgment from communicator as a result of report failure MAP5000 panel alarm (only for MAP5000 panel firmware 1.2.x or higher) |
| Report failure intrusion and tamper alarm (V1.2x) | MAP5000 panel has received negative acknowledgment from communicator as a result of report failure intrusion and tamper alarm (only for MAP5000 panel panel firmware 1.2.x or higher) |
| Report failure summary alarm | MAP5000 panel has received negative acknowledgment from communicator due to report failure summary alarm |
| Report failure summary trouble | MAP5000 panel has received negative acknowledgment from communicator due to report failure trouble |
| Report failure duress alarm | MAP5000 panel has received negative acknowledgment from communicator due to report failure duress alarm |
| Report failure hold-up alarm | MAP5000 panel has received negative acknowledgment from communicator due to report failure hold-up alarm |
| Report failure amok alarm | MAP5000 panel has received negative acknowledgment from communicator due to report failure amok alarm |
| Report failure intrusion and tamper alarm | MAP5000 panel has received negative acknowledgment from communicator due to report failure intrusion and tamper alarm |
| Report failure panel alarm | MAP5000 panel has received negative acknowledgment from communicator due to report failure panel alarm |
| Internal tamper alarm | Tamper alarm from disarmed area |

| Behavior item type | Output is activated for ... |
|---|---|
| External tamper alarm | Tamper alarm from armed area |
| Bypass | At least one device is bypassed |
| Disable | At least one device is disabled |
| Management system interface trouble | Trouble in connection to management system |
| Present mode ON | The area programmed as present/absent is disarmed |
| Blocking time active | Blocking time is active for one or more areas |
| Wrong login | The maximum number of permitted passcode input attempts on a touch keypad was exceeded |
| User active | A defined user is logged in at a defined touch keypad |
| External fire alarm | Fire alarm from armed area |
| Internal fire alarm | Fire alarm from disarmed area |
| External fire trouble | Fire device trouble from armed area |
| Internal fire trouble | Fire device trouble from disarmed area |
| Walk test | Walk test is active |
| Motion detector test | Motion detector test is active in one or more areas |
| Exit delay active | From start of exit delay until<br>– end of exit delay<br>– arming of the area |
| Entry delay active | From start of entry delay until<br>– end of entry delay<br>– disarming of the area |
| Reportable duress alarm | Reporting of duress alarm event |
| Reportable hold-up alarm | Reporting of hold-up alarm event |
| Reportable amok alarm | Reporting of amok alarm event |
| Reportable external intrusion alarm | Reporting of external intrusion alarm event, possibly also delayed if present/absent option is used |
| Reportable external tamper alarm | Reporting of external tamper alarm event, possibly also delayed if present/absent option is used |
| Reportable panel summary trouble | Reporting of panel summary trouble event, possibly also delayed if present/absent option is used |
| Reportable panel summary armed | Reporting of panel summary armed |
| Reportable external fire alarm | Reporting of duress alarm event, possibly also delayed if present/absent option is used |
| Anti-mask intrusion trouble | Covering of a motion detector |

| Behavior item type | Output is activated for ... |
|---|---|
| External tamper alarm disarmed | Tamper alarm from disarmed area with simultaneous reporting via the communicator |
| Transmission path fault | In the event of communication failure between communicator and receiver |
| Ethernet path layer1 fault | In the event of failure of connection to network connector |
| Wireless path layer1 fault | In the event of failure of connection to network<br>– field strength insufficient<br>– registration not possible<br>– GPRS service not available<br>– no connection to the DE module |
| IPC reporting failure | No acknowledgment received from the receiver within 240 sec. |
| S1S Transmission Path Fault | Communication failure between MAP5000 panel and communicator |
| S1S Reporting Failure | Panel has received negative acknowledgment from communicator |
| REST-API Trouble | Trouble in connection via REST-API (former Open Intrusion Interface) |
| Silence Area x | Silence sirens and buzzer of area x |
| Reset Area x | Clear events of area x |

## 6.5.2 Sirens and communicator in accordance with EN50131 grade 3

**Notice!**
Sirens must be in operation for at least 90 seconds and a maximum of 15 minutes, unless local or national requirements demand a shorter duration.

The following variants are possible:

**Variant A (ICP-MAP0007-2 MAP DE interface module and ICP-COM-IF2 MAP relay module required)**

– Two supervised sirens
  Connections 10 / 11 and 12 / 13 on ICP-MAP0007-2)
– One communicator (min. SP3)
  Connections R1 - R7 on ICP-COM-IF2

**Variant B (ICP-COM-IF2 required)**

– One self-powered siren
  Outputs 10 / 11 or 13 / 14 on MAP5000 panel
– One communicator (min. SP3)
  Outputs R1 - R7 on ICP-COM-IF2

**Variant C (ICP-COM-IF2 required)**

– One communicator (min. DP2)
  Outputs R1 - R7 on ICP-COM-IF2

**Variant D (ICP-COM-IF2 required)**

– One communicator (min. SP4)
  Outputs R1 - R7 on ICP-COM-IF2

# 7 Maintenance and service

## 7.1 General information

Maintenance and inspection work must be carried out at defined intervals and by corresponding expert personnel. The regulations of DIN VDE 0833 apply additionally for all work of this kind.

**Notice!**
Have maintenance and inspection work carried out regularly by trained expert personnel. Bosch Sicherheitssysteme GmbH recommends performing a functional and visual inspection at least once annually.

**Danger!**
Danger of electric shock if live parts are touched. For your safety, you should switch off the power supply to the security system when carrying out maintenance or installation work!

## 7.2 Installer button

**Using the installer button**

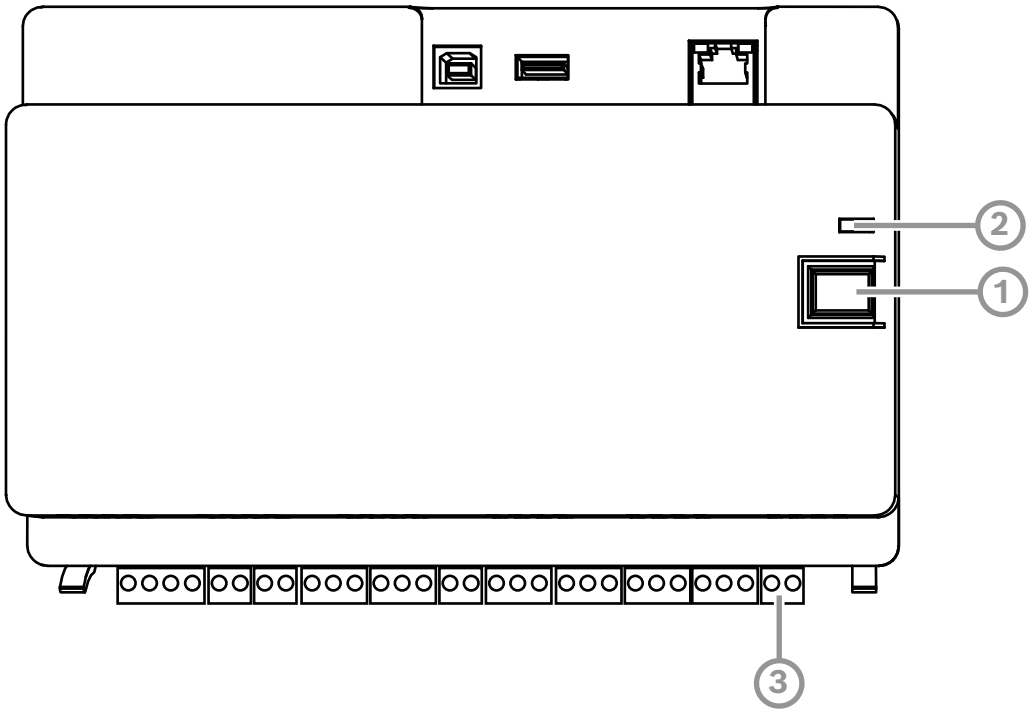


| Callout | Description |
|---|---|
| 1 | Installer button |
| 2 | Operating LED |
| 3 | Tamper switch |

**Switching on the installer mode**

- Press the installer button on the MAP5000 panel for three seconds.

⇨ The operating LED starts blinking slowly to indicate the installer mode.

**Switching off the installer mode**

- Press the installer button on the MAP5000 panel for three seconds.

**System restart**

The system can be restarted without being de-energized.

- Press the installer button on the MAP5000 panel for six seconds.
  The LEDs on the MAP5000 panel and all other installed modules stop indicating briefly. The initialization phase, indicated by a blinking LED, starts.

⇨ The LEDs on the MAP5000 panel and all other installed modules start indicating and the system is ready for operation again.

| LED status | Description |
|---|---|
| Off | No function |
| Fast blinking | Connection setup |
| Slow blinking | Data exchange |
| Permanently lit | Operating state |

**Restoring the initial state of the MAP5000 panel**

1. Put the panel in **Failsafe mode** (see below).
2. Update the firmware.

**Failsafe mode**

**Forcing failsafe mode**

Programming and MAP5000 panel firmware are deleted and **RPS for MAP** passcode is reset to default settings when executing this option.

1. Open the tamper switch.
2. De-energize the MAP5000 panel (e.g. disconnect the small white connector at the rear of the MAP5000 panel).
3. Press and hold the installer button.
4. Connect voltage (e.g. plug in small white connector again).
5. Release the installer button after 45 seconds.
6. Wait until operating LED is permanently lit (can take several minutes).
7. Transfer latest MAP5000 panel firmware “MAP_Update.Cumulative ...tar.bz2“ again using **RPS for MAP**.

**Forcing extended failsafe mode**

Programming, the MAP5000 panel firmware and history are deleted and network settings are reset (DHCP, 0.0.0.0) when executing this option.

- Carry out steps 1 - 6 of the above, then carry out steps 2 - 7.

# 8 Technical Specifications

**Electrical**

| | |
|---|---|
| Maximum operating voltage in VAC | 230 (-15 %, + 10%) |
| Minimum AC line frequency in Hz | 47 |
| Maximum AC line frequency in Hz | 63 |
| Maximum power consumption in W per power supply | 150 |
| Minimum battery capacity in Ah per power supply | 18 |
| Maximum battery capacity in Ah per power supply | 80 |
| Back-up time | Determined by battery capacity and system load. Consider time or capacity limits for recharging the batteries regarding local regulations or EN standards if needed. |

| **Frequency bands of operation** | **Power level for radio equipment** |
|---|---|
| GSM900 | Class 4 (2W) - GPRS Class 10 |
| GSM1800 | Class 1 (1W) - GPRS Class 10 |

**Mechanical**

| | |
|---|---|
| MAP panel enclosure | |
| Dimension in cm (H x W x D) | 65.8 x 44.3 x 19.35 |
| Weight in kg | 15.34 |
| MAP power enclosure | |
| Dimension in cm (H x W x D) | 65.8 x 44.3 x 19.35 |
| Weight in kg | 14.41 |
| MAP expansion enclosure | |
| Dimension in cm (H x W x D) | 43.6 x 44.3 x 11.2 |
| Weight in kg | 8.31 |
| **System parameters** | |
| Number of addresses | 1500 |
| Number of areas | 500[1] |
| Event log capacity | 5000 |
| Users | |
| Number of users | 1000 |

| | |
|---|---|
| Number of PINs | 996 (with 9 digits, supporting a 3-digit user ID (004 - 999) and a 6-digit passcode) |
| Number of possible combination per PINs | 1 million |
| Validity of PINs | Permanent validity, time-limited validity or one-time use configurable |
| Number of devices | |
| MAP LSN gateways | 8 or 1 to respective MAP5000 panel |
| MAP touch keypads | 32 or 2 to respective MAP5000 panel |
| Supported printer | 1 (in VdS systems for service purposes only) |
| MAP power supplies 150W | 32 |
| MAP BDB/CAN splitters | 8 |
| Ethernet interface | 1, RJ 45 connection, 100Mbps maximum |
| Management system connection | Via MAP OPC server from Bosch - in VdS systems, only feedback-free connection as information system via exclusive transmission path |
| Number of inputs | |
| Programmable inputs on LSN Bus | Limited to maximum number of available addresses system wide |
| Number of inputs (on MAP5000 panel) | 8 |
| Number of outputs | |
| Programmable outputs on LSN Bus | Limited to maximum number of available addresses system wide |
| Power drive (on MAP5000 panel) | 2 |
| Dry contact (on MAP5000 panel) | 2 |
| Auxiliary power (on MAP5000 panel) | 1 |
| Supervised output (on MAP DE interface module) | 3 |
| Open-collector output (on MAP DE interface module) | 2 |

[1]VdS system is limited to two areas, when connecting to the MAP touch keypads via the internal and external BDB.

**Environmental**

| | |
|---|---|
| Minimum operating temperature in °C | -10 |
| Maximum operating temperature in °C | 55 |
| Minimum storage temperature in °C | -20 |

| | |
|---|---|
| Maximum storage temperature in °C | 60 |
| Minimum relative humidity in % | 5 |
| Maximum relative humidity in % | 95 |
| Protection class | IP30 |
| Security level | IK06 |
| Environmental class | II:<br>EN50130-5, EN50131-1, VdS 2110, VdS 2252 |
| Usage | Indoor |

# 9 Appendices

This chapter contains information and instructions for creating programming that complies with the requirements of a specific standard.

**Notice!**
Use the default setting for parameters that are not explicitly mentioned in this description. In addition, the instructions for MAP5000 panel validation in the **RPS for MAP** must be followed.

## 9.1 Requirements in accordance with VdS class C

### 9.1.1 Selecting the default setting

- Select VdS class C as the default property values setting.

**Refer to**
- *Standard-compliant programming, page 64*

### 9.1.2 Power supply for areas

Refer to *Connecting the LSN gateway, page 51*.

### 9.1.3 Touch keypads

Refer to:
- *Connecting the touch keypad, page 54*
- *Planning the system with power supply, page 8*
- *Planning the system with BDB/CAN splitter, page 12*

### 9.1.4 Connection to a management system

Refer to *IP Interface, page 61*.

### 9.1.5 Printer connection

Connecting the supported printer is permitted only for service purposes.

### 9.1.6 Access levels

The standard distinguishes between four access levels (AE):
- AE 1 Access for everyone, no authorization/code required
- AE 2 Access for users, user passcode required
- AE 3 Access for installers via **touch keypad** or via **RPS for MAP**
- AE 4 Access for manufacturers via **RPS for MAP**

**Selecting the access level**

AE 1 Access for everyone, no authorization/code required

AE 2 Access for users, user passcode required

AE 3 Access for installers via **touch keypad**

1. Open MAP panel enclosure.
   Switch to installer mode (refer to *Installer button, page 71*).
2. Enter installer passcode.

AE 3 Access for installers via **RPS for MAP**

1. Open MAP panel enclosure.
   or
   authorize from **RPS for MAP** with an AE 2 user with corresponding permissions (touch keypad: main menu page 2 > RPS).
2. Establish a connection between the MAP5000 panel and **RPS for MAP**.

AE 4 Access for manufacturers via **RPS for MAP**
1. Authorize the manufacturer user with an AE 2 user with corresponding permissions (touch keypad: main menu page 1 > maintenance page 3 > manufacturer permission).
2. Open MAP panel enclosure.
   Switch to installer mode = AE 3 (*Installer button, page 71*).
3. Login with the passcode of the manufacturer at the installer touch keypad (*Manufacturer authorization, page 65*).
4. Establish a connection between the MAP5000 panel and **RPS for MAP**.

**Functions of the access levels**
The assignment of the functions to the access levels 2 and 3 can be adapted in **RPS for MAP**.
Further subdivisions are possible within the access levels if the owner wishes to grant the users different permissions: **User Manager > Permission Sets**

| **General permissions** | **Access level** | | | |
|---|---|---|---|---|
| | **1** | **2** | **3** | **4** |
| May silence speaker on touch keypad | | X | X | |
| May change own user passcode | | X | X | X |
| May transmit/receive programming with RPS for MAP | | | X | |
| May receive history with RPS for MAP | | | X | |
| May perform diagnostics with RPS for MAP | | | X | |
| May perform software updates with RPS for MAP | | | X | X |
| **Operations category permissions** | **1** | **2** | **3** | **4** |
| May disable device | | | X | |
| May enable device | | | X | |
| May turn chime on/off | | X | X | |
| May change schedule | | X | X | |
| May edit blocking time | | X | X | |
| **User category permissions** | **1** | **2** | **3** | **4** |
| May add user | | X | X | |
| May delete user | | X | X | |
| May change user passcode | | X | X | |
| **Event category permissions** | **1** | **2** | **3** | **4** |
| May clear internal alarm | | X | X | |

| | | | | |
|---|---|---|---|---|
| May clear external alarm | | X | X | |
| May clear tamper | | | X | |
| May clear trouble | | X | X | |
| May clear battery trouble | | | X | |
| May silence | | | X | |
| **Remote service category permissions** | **1** | **2** | **3** | **4** |
| May authorize manufacturer user | | X | X | |
| May authorize RPS for MAP user | | X | X | |
| **Arm category permissions** | **1** | **2** | **3** | **4** |
| May arm area * | | X | X | |
| May disarm area * | | X | X | |
| Can disarm only if in alarm | | X | X | |
| May bypass detectors | | | X | |
| May bypass detectors in area | | | X | |
| May unbypass detector | | X | X | |
| May switch internal program on/off | | X | X | |
| **Status category permissions** | **1** | **2** | **3** | **4** |
| May view area status | | X | X | |
| May view device status | | X | X | |
| May view duress alarm | | X | X | |
| May view alarm count | | X | X | |
| May view event memory | | X | X | |
| May view MAP5000 panel history | | X | X | |
| May print MAP5000 panel history | | X | X | |
| May view MAP5000 panel version | | X | X | |
| **Maintenance category permissions** | **1** | **2** | **3** | **4** |
| May adjust touch keypad volume/brightness | | X | X | |
| May change output state | | X | X | |
| May set date time | | | X | |
| May test bell | | X | X | |
| May test motion detectors | | X | X | |
| May walk test automatic points | | | X | |

| | | | | |
|---|---|---|---|---|
| May walk test points | | | X | |

**Table 9.1:** Permissions

* also with Duress PIN

### 9.1.7 Connection of an LSN fire detector as a technical detector

**Warning!**
Configuration
The configuration of an LSN fire detector may not impact the arming function.
This means that arming needs to be possible even with a tripped detector.

**Warning!**
Retroactive effects
By connecting an LSN fire detector, no negative retroactive effects on the intrusion functionality may happen.

**Notice!**
Mechanical removal lock
The LSN fire detector bases have a mechanical removal lock function which can be activated or deactivated. With activating the mechanical removal lock, removing the detector without a mechanical tool is not possible.
For a VdS compliant installation, activate the mechanical removal lock function.

## 9.2 Requirements in accordance with EN 50131 grade 3

**Notice!**
If not all requirements in accordance with this standard can be satisfied or only a lower grade can be met, the compliance mark (EN 50131 grade 3) must be either removed or adapted.

### 9.2.1 Selecting the default setting

1. Select EN50131 grade 3 as the default property values setting (refer to *Standard-compliant programming, page 64*).
2. If the MAP5000 panel validation in accordance with EN 50131 grade 3 fails, do **not** proceed with programming the MAP5000 panel.

### 9.2.2 Connectable peripherals

To comply with the requirements for proper functioning of the MAP5000 panel (i.e. detection and forwarding of intrusion, hold-up, tamper and trouble states), only peripherals may be connected that are certified in accordance with EN 50131 grade 3 or grade 4.

### 9.2.3 Arming / disarming without entry / exit delay

**Arming outside the secured area, e.g. with arming device**

1. Include a new area if not yet present.
2. Connect a free input with the device key switch.
3. Using the wizard, select the type **Static** or **Dynamic**, the user and function of the key switch **Arm / Disarm Area**. Now select the area that is to be armed / disarmed. For exit delay, select **No Delay**.

4. Select the area in the properties field of the **Key Switch > Area**.
5. In the properties field of the **Touch Keypad**, include the area in the scope **Local Area** or **Additional Areas in Scope**

**Programming two outputs for signaling the armed / disarmed state**

1. Connect one free output in each case with the device **LED**.
2. Using the wizard, program one output with the behavior item **Area Armed** and a second output with the behavior item **Area Disarmed**.
3. The signal must be time-limited. Enter a corresponding time (typically 10 seconds / maximum 30 seconds) for **Activation Duration**.

**Securing access route against unauthorized entry in armed state, e.g. by installing a blocking element**

1. Connect a free output with the device **LED**.
2. Variant A: Blocking element is actively controlled CLOSED. Using the wizard, program an output with the behavior item **Area Armed**
   or
   Variant B: Blocking element is actively controlled OPEN. Using the wizard, program an output with the behavior item **Area Disarmed**.
3. The signal must be static; enter 00:00:00 for **Activation Duration**.
4. Refer to the manufacturer's connection instructions for further information.

### 9.2.4 Arming / disarming with entry / exit delay

**Arming inside the secured area, e.g. with touch keypad**

1. Include a new area if not yet present.
2. Include a touch keypad if not yet present.
3. Include the area in the scope of the touch keypad: **Local Area**.
4. Program touch keypad for arming with exit delay: **Use Area Normal Delay Time**.
5. The value for the entry / exit delay can be adapted if required: **Area Manager > Area > Timing and Delays**:
   normal entry delay (typically 45 sec. / at least 30 sec.)
   normal exit delay (typically 60 sec.)

**Programming entry / exit route**

1. Program all points of the entry / exit route to the point type intrusion.
2. Select the type of exit point optionally for exit route points:

| Exit point type | Behavior |
|---|---|
| Initial follower [1] | Point without prevention of arming readiness, e.g. PIR that has the touch keypad in the detection area. Important: point must be in normal state after exit, otherwise an alarm will be tripped |
| Follower [1] | Point that does not trip an alarm as long as the exit delay is running. Only relevant for option **MAP5000 Panel > Armed State At Exit Delay Start** |
| Exit | Door point that must be mandatorily tripped once upon leaving the area. The option **MAP5000 Panel > Unvacated Premises** must be activated |

| | |
|---|---|
| Interrupt | Door point that shortens the running exit delay to 10 sec. (recommended) |
| Restart | Point that restarts the exit delay; possible only once during the exit |

**Table 9.2:** Exit point types

[1)] Not for EN 50131

- Select the type of entry point for all entry route points.

| Entry Point Type | Behavior |
|---|---|
| Delay 'Normal' | Door point that starts the entry delay with the value 'Normal' |
| Delay 'Extended' | Door point that starts the entry delay with the value 'Extended' |
| Follower | Point that does not trip an alarm as long as the entry delay is running |

**Table 9.3:** Entry Point Types

**Programming delayed reporting for all intrusion points of the area**

1. For all points of the point type **Intrusion** and **Intrusion 24h**, set the parameter **Supports Delayed Reporting** to **Yes**.
2. For reporting **(Event Manager > Panel Event Groups > Properties > Reportable Events)**, set a **Transmission Delay** that is the same as the exit delay (typically 45 sec. / at least 30 sec.) for **External Intrusion Alarm**.

### 9.2.5 Forced Arming with automatic bypass

Points that are not in normal state and therefore prevent arming can be automatically bypassed for arming. These points are automatically unbypassed again when the system is next disarmed.

1. Program point to point type **Intrusion (Bypassable)** or **Intrusion 24h (Bypassable)**.
2. Set the maximum number of points that can be bypassed on arming under **MAP5000 > Maximum Bypass Count per Area** (typically 1 - value range is not specified by the standard).
3. Set the maximum number of times that a point can be bypassed on arming under **MAP5000 > Maximum Times A Device Can Be Bypassed** (typically 1 - value range is not specified by the standard).
4. Set the permission **May Force Bypass Detectors In Area** for the user: **User Manager > Permission Sets > Arm Category Permissions**.

### 9.2.6 Automatic arming / disarming

The touch keypad is located in the secured area.

1. Include a new area if not yet present.
2. Include a touch keypad if not yet present.
3. Include the area in the scope of the touch keypad: **Local Area**.

**Programming two outputs for signaling the armed / disarmed state**

1. Connect one free output in each case with the device **LED**.
2. Using the wizard, program one output with the behavior item **Area Armed** and a second output with the behavior item **Area Disarmed**.
3. The signal must be time-limited. Enter a corresponding time (defaulted 10 seconds / maximum of 30 seconds) for **Activation Duration**.

**Automatic arming at a predefined time: defining the arming time**

1. Start the schedule wizard and define the time of arming.
2. As action, select **Arm Area(s) Using Exit Delay**.
3. Program the duration of the acoustic warning signal before arming in the area: **Area Manager > Area > Exit Delay > Normal Delay Time**.
4. The option **Arm Only If Area Is Ready To Arm** must be deactivated.

Automatic bypassing of points can be optionally programmed. For requirements, refer to *Forced Arming with automatic bypass, page 81*.

**Automatic arming after disarming**

- Do **not** set the option **Automatic Arming after Disarming** for an area. The procedure does not comply with the requirements of EN 50131.

**Automatic disarming at a predefined time: defining the disarming time**

1. Start the schedule wizard and define the time of disarming.
2. As action, select **Disarm Area(s)**.

**Refer to**

– *Forced Arming with automatic bypass, page 81*

## 9.2.7 Alarm output via siren and communicator

Alarms, trouble events and other events must be output via siren and/or communicator.

- For possible variants, refer to *Sirens and communicator in accordance with EN50131 grade 3, page 69*.

**External alarm via siren**

- Activate the sirens at least for the following events (behavior items):
  – External intrusion alarm
  – External tamper alarm
- Set the option **Panel Wide Device**.

Additional behavior items can be optionally added.

**Remote alarm via communicator**

- Activate the communicator at least for the following events **(Event Manager > Panel Event Groups > Properties > Reportable Events)**:
  – External intrusion alarm
  – External tamper alarm
  – Hold-up alarm
  – Duress alarm
  – Summary trouble

Additional reportable events can be optionally added.

### 9.2.8 Connection to a management system

Refer to *IP Interface, page 61*.

### 9.2.9 Printer connection

Connecting the supported printer is permitted only for service purposes.

### 9.2.10 Access levels

The standard distinguishes between four access levels (AE):

- AE 1 Access for everyone, no authorization/code required
- AE 2 Access for users, user passcode required
- AE 3 Access for installers via **touch keypad** or via **RPS for MAP**
- AE 4 Access for manufacturers via **RPS for MAP**

**Selecting the access level**

AE 1 Access for everyone, no authorization/code required

AE 2 Access for users, user passcode required

AE 3 Access for installers via **touch keypad**

1. Open control panel enclosure.
   The internal warning device is activated for 3 seconds.[1]
2. Switch to installer mode (refer to *Installer button, page 71*).
3. Enter installer passcode.

AE 3 Access for installers via **RPS for MAP**

1. Open control panel enclosure.
   Internal warning device is activated for 3 second.[1]
   or
   authorize from RPS with an AE 2 user with corresponding permissions (touch keypad: main menu page 2 > RPS).
2. Establish a connection between the panel and RPS.

AE 4 Access for manufacturers via **RPS for MAP**

1. Authorize the manufacturer user with an AE 2 user with corresponding permissions (touch keypad: main menu page 1 > maintenance page 3 > manufacturer permission).
2. Open touch keypad enclosure.
   The internal warning device is activated for 3 sec.[1]
3. Switch to installer mode = AE 3 (*Installer button, page 71*).
4. Login with the passcode of the manufacturer at the installer touch keypad (*Manufacturer authorization, page 65*).
5. Establish a connection between the panel and RPS.

1) Activation of the warning device on opening the control panel enclosure may be omitted if access to access level 3 is controlled by switches, locks (at least 15,000 variation possibilities) or other equivalent means.

**Internal warning device when control panel enclosure is opened**

An internal warning device must be provided that trips a time-limited audible alarm when the control panel enclosure is opened in unarmed state.

1. Assign device siren to free output.

2. In the properties> behavior item list of the device siren, activate the option **Include External Tamper Alarm Disarmed of Onboard Tamper**.

**Functions of the access levels**

The assignment of the functions to the access levels 2 and 3 can be adapted in **RPS for MAP**.

Further subdivisions are possible within the access levels if the owner wishes to grant the users different permissions: **User Manager > Permission Sets**

| **General permissions** | **Access level** | | | |
|---|---|---|---|---|
| | **1** | **2** | **3** | **4** |
| May silence speaker on touch keypad | | X | X | |
| May change own user passcode | | X | X | X |
| May transmit/receive programming with RPS for MAP | | | X | |
| May receive history with RPS for MAP | | | X | |
| May perform diagnostics with RPS for MAP | | | X | |
| May perform software updates with RPS for MAP | | | X | X |
| **Operations category permissions** | **1** | **2** | **3** | **4** |
| May disable device | | | X | |
| May enable device | | | X | |
| May turn chime on/off | | X | X | |
| May change schedule | | X | X | |
| May edit blocking time | | X | X | |
| **User category permissions** | **1** | **2** | **3** | **4** |
| May add user | | X | X | |
| May delete user | | X | X | |
| May change user passcode | | X | X | |
| **Event category permissions** | **1** | **2** | **3** | **4** |
| May clear internal alarm | | X | X | |
| May clear external alarm | | X | X | |
| May clear tamper | | | X | |
| May clear trouble | | X | X | |
| May clear battery trouble | | | X | |
| May silence | | | X | |
| **Remote service category permissions** | **1** | **2** | **3** | **4** |
| May authorize manufacturer user | | X | X | |
| May authorize RPS for MAP user | | X | X | |
| **Arm category permissions** | **1** | **2** | **3** | **4** |

| | | | | |
|---|---|---|---|---|
| May arm area * | | X | X | |
| May disarm area * | | X | X | |
| Can disarm only if in alarm | | X | X | |
| May bypass detectors | | | X | |
| May bypass detectors in area | | | X | |
| May unbypass detector | | X | X | |
| May switch internal program on/off | | X | X | |
| **Status category permissions** | **1** | **2** | **3** | **4** |
| May view area status | | X | X | |
| May view device status | | X | X | |
| May view duress alarm | | X | X | |
| May view alarm count | | X | X | |
| May view event memory | | X | X | |
| May view MAP5000 panel history | | X | X | |
| May print MAP5000 panel history | | X | X | |
| May view MAP5000 panel version | | X | X | |
| **Maintenance category permissions** | **1** | **2** | **3** | **4** |
| May adjust touch keypad volume/brightness | | X | X | |
| May change output state | | X | X | |
| May set date time | | | X | |
| May test bell | | X | X | |
| May test motion detectors | | X | X | |
| May walk test automatic points | | | X | |
| May walk test points | | | X | |

**Table 9.4:** Permissions

* also with Duress PIN

**Refer to**
- *Installer button, page 71*
- *Manufacturer authorization, page 65*

## 9.2.11 Additional functions

The MAP5000 panel has the following additional functions which do not have any influence on the intended operation of the MAP5000 panel.

**Point type technical, fire for alarm inputs**

Inputs that are assigned the device **Point** can be programmed to the point type technical or fire (refer to *Point types and point evaluation, page 66*).

**Internal program**

Points of the point type Intrusion can be assigned to an internal program.
When points are assigned to an internal program, and internal program is switched on, the points are capable of alarm signaling in disarmed state.
If the detector is tripped, an internal alarm is generated.
This internal alarm results in only local alarm signaling without a remote alarm.

**Outputs for individual applications**

Outputs of the MAP5000 panel can be used to control individual applications. A prerequisite for this is that no behavior item (no activation by the intended operation of the panel) is assigned to such an output.

**Manual output control**

- Select **Touch Keypad > Behavior >Outputs Available For Direct Command.**

**Automatic via schedule**

1. Using the schedule wizard, enter the time when the output is to be switched on/off.
2. As action, select **Output ON** or **Output OFF**.
3. The schedule can optionally be edited at the touch keypad. **Schedule > Behavior > May Be Edited At Touch Keypad**.

**Chime mode**

If **Chime Mode** is activated on the touch keypad in disarmed state, tripping of an intrusion point with the option **Chime Mode Capable** leads to a one-off chime tone on the touch keypad.

- Assign the point to the **local area** of the touch keypad.

## 9.3 Requirements in accordance with SES

The basis for this requirement is the standard EN 50131 grade 3 (refer to *Requirements in accordance with EN 50131 grade 3, page 79*). Deviations from this standard are already taken into account in the fundamental behavior of the MAP5000 panel and / or described below.

### 9.3.1 Selecting the default setting

1. Select EN50131 grade 3 as the default property values setting (refer to *Standard-compliant programming, page 64*).
2. If the MAP5000 panel validation in accordance with EN 50131 grade 3 fails, do **not** proceed with programming the MAP5000 panel.

**Refer to**

– *Point types and point evaluation, page 66*
– *Standard-compliant programming, page 64*

### 9.3.2 Automatic arming / disarming

Arming without a warning signal is permitted if it is possible to ensure by technical or organizational measures that there are no persons in the supervised area before arming.

– Refer to *Automatic arming / disarming, page 81*.

**Automatic arming at a predefined time with warning signal**

1. Start the schedule wizard and define the time of arming.
2. As action, select **Arm Area(s) Using Exit Delay**.
3. Program the duration of the acoustic warning signal before arming in the area: **Area Manager > Area > Exit Delay > Normal Delay Time**.
4. Deactivate the option **Arm Only If Area Is Ready To Arm**.

5. Optionally program automatic bypassing of points.

**Automatic arming at a predefined time without warning signal**
- Start the schedule wizard and define the time of arming.
- As action, select **Arm Area(s) Immediately**.
- Optionally program automatic bypassing of points.

**Automatic arming after disarming without warning signal**
- Enter the duration after disarming when automatic arming is about to take place in the area. **Area Manager > Area > Behavior > Automatic Arming after Disarming**.
- Optionally program automatic bypassing of points.

**Disarming at a predefined time**
Automatic disarming is **not** permitted for security reasons.

**Refer to**
- *Automatic arming / disarming, page 81*
- *Forced Arming with automatic bypass, page 81*

### 9.3.3 Custom point type duress alarm

According to the **SES guideline**, the duress alarm must not have any influence at the ready to arm consideration.
Therefore, it is must to create a new custom point type for the duress alarm, because the default duress alarm in **RPS for MAP** has influence at the ready to arm consideration.
1. Go to Point Manager > Point Types > Custom Point Types > Create > ...
2. Set the following in the pop-up window and confirm this with "OK".
- Standard Point Type: Duress (Silent)
- Point type Name: for example, Duress_SES
3. Set the behavior in the Point Properties of the new created point type:
- Ready To Arm Consideration: NO

This new custom point type must be used for all SES systems.

### 9.3.4 Areas with blocking time

Disarming of an area can be optionally influenced by means of a blocking time. An external alarm from the area cancels the blocking time, i.e. disarming is possible.
1. Under **Area** (area manager), select the desired **Time Model**.
   Please note: Disarming is possible within a defined time interval.
2. A **Time Model** is made up of **Day Models** and can be adapted or created in the user manager if necessary.
3. A blocking time can be changed by the user at the touch keypad up to seven days in advance if the user has the corresponding permissions. **User Manager > Permission Sets > Operations Category > May Edit Blocking Time**

### 9.3.5 Access Levels

The standard distinguishes between four access levels (AE):
- AE 1 Access for everyone, no authorization/code required
- AE 2A Access for users, user passcode required
- AE 2B Access for users, user passcode required
- AE 3 Access for installers via **touch keypad** or via **RPS for MAP**
- AE 4 Access for manufacturers via **RPS for MAP**

Level 2A is a subset of level 2B.

**Selecting the access level**

AE 1 Access for everyone, no authorization/code required

AE 2A Access for users, user passcode required

AE 2B Access for users, user passcode required

AE 3 Access for installers via **touch keypad**

1. Open MAP panel enclosure.
   The internal warning device is activated for 3 sec.[1]
2. Switch to installer mode (refer to *Installer button, page 71*).
3. Enter installer passcode.

AE 3 Access for installers via **RPS for MAP**

1. Open MAP panel enclosure.
   Internal warning device is activated for 3 sec.[1]
   or
   authorize from RPS with an AE 2 user with corresponding permissions (touch keypad: main menu page 2 > RPS).
2. Establish a connection between the MAP5000 panel and RPS for MAP.

AE 4 Access for manufacturers via **RPS for MAP**

1. Authorize the manufacturer user with an AE 3 user with corresponding permissions (touch keypad: main menu page 1 > maintenance page 3 > manufacturer permission).
2. Open MAP panel enclosure.
   The internal warning device is activated for 3 sec.[1]
3. Switch to installer mode = AE 3 (*Installer button, page 71*).
4. Login with the passcode of the manufacturer at the installer touch keypad (*Manufacturer authorization, page 65*).
5. Establish a connection between the MAP5000 panel and RPS for MAP.

1) Activation of the warning device on opening the MAP panel enclosure may be omitted if access to access level 3 is controlled by switches, locks (at least 15,000 variation possibilities) or other equivalent means.

**Internal warning device when control panel enclosure is opened**

An internal warning device must be provided that trips a time-limited audible alarm when the control panel enclosure is opened in unarmed state.

1. Assign device siren to free output.
2. In the properties> behavior item list of the device siren, activate the option **Include External Tamper Alarm Disarmed of Onboard Tamper**.

**Functions of the Access Levels**

The assignment of the functions to the access levels 2 and 3 can be adapted in **RPS for MAP**.

Further subdivisions are possible within the access levels if the owner wishes to grant the users different permissions: **User Manager > Permission Sets**

| **General permissions** | **Access Level** | | | | |
|---|---|---|---|---|---|
| | **1** | **2A** | **2B** | **3** | **4** |
| May silence buzzer on touch keypad | X | X | X | X | |
| May change own user passcode | | X | X | X | X |

| | | | | | |
|---|---|---|---|---|---|
| May transmit/receive programming with RPS for MAP | | | | X | |
| May receive history with RPS for MAP | | | | X | |
| May perform diagnostics with RPS for MAP | | | | X | |
| May perform software updates with RPS for MAP | | | | | X |
| **Operations category permissions** | **1** | **2A** | **2B** | **3** | **4** |
| May disable device | | | | X | |
| May enable device | | | | X | |
| May turn chime on/off | | | X | X | |
| May change schedule | | | X | X | |
| May edit blocking time | | | X | X | |
| **User category permissions** | **1** | **2A** | **2B** | **3** | **4** |
| May add user | | | X | X | |
| May delete user | | | X | X | |
| May change user passcode | | | X | X | |
| **Event category permissions** | **1** | **2A** | **2B** | **3** | **4** |
| May clear internal alarm | | | X | X | |
| May clear external alarm | | | X | X | |
| May clear tamper | | | | X | |
| May clear trouble | | | | X | |
| May clear battery trouble | | | | X | |
| May silence | | | X | X | |
| **Remote service category permissions** | **1** | **2A** | **2B** | **3** | **4** |
| May authorize manufacturer user | | | | X | |
| May authorize RPS for MAP user | | | X | X | |
| **Arm category permissions** | **1** | **2A** | **2B** | **3** | **4** |
| May arm area * | | X | X | X | |
| May disarm area * | | | X | X | |
| Can disarm only if in alarm | | | X | X | |
| May bypass detectors | | | | X | |
| May bypass detectors in area | | | X | X | |
| May unbypass detector | | X | X | X | |
| May switch internal program on/off | | | X | X | |
| **Status category permissions** | **1** | **2A** | **2B** | **3** | **4** |
| May view area status | | X | X | X | |

| | | | | | |
|---|---|---|---|---|---|
| May view device status | | X | X | X | |
| May view duress alarm | | X | X | X | |
| May view alarm count | | X | X | X | |
| May view event memory | | X | X | X | |
| May view MAP5000 panel history | | | X | X | |
| May print MAP5000 panel history | | | X | X | |
| May view MAP5000 panel version | | X | X | X | |
| **Maintenance category permissions** | **1** | **2A** | **2B** | **3** | **4** |
| May adjust touch keypad volume/brightness | | | X | X | |
| May change output state | | | X | X | |
| May set date time | | | | X | |
| May test bell | | | X | X | |
| May test motion detectors | | X | X | X | |
| May walk test automatic points | | | | X | |
| May walk test points | | | | X | |

**Table 9.5:** SES Permissions

* also with Duress PIN

**Refer to**
- *Installer button, page 71*
- *Manufacturer authorization, page 65*

## 9.3.6 Tamper surveillance

**Tamper switch with wall tamper**

- When mounting the enclosure and installing the tamper switch, take the wall tamper of the MAP5000 panel into account (refer to *Mounting the enclosure, page 21* and *Installing and connecting the tamper switch, page 56*).

**Location supervision of the panel**

External alarm signaling by means of siren and/or remote alarm signaling with communicator must be planned in accordance with *Sirens and communicator in accordance with EN50131 grade 3, page 69*.

1. In case of variants A, B and C with communicator(s) of classes 3 and 4, provide location supervision for the MAP5000 panel as soon as one or more areas are armed.
   It is possible to omit location supervision for variant D with class 5 communicator.
2. Realize the location supervision as a technical solution by the intrusion alarm system itself. Therefore, ensure the EN-compliance of the requirements for disarming.
   Or:
   Realize the location supervision by security-relevant persons who guarantee that actions that pose a risk to security are detected at all times at the time of the required location supervision.

**Design types of the communicators according to SES**

The transmission paths for remote alarm signaling are divided into the following:

– Demand-driven connection with 25-hourly (AÜA-B25) or 5-hourly function monitoring (AÜA-B5)
– Existing connection with 3-minute (AÜA-S180) or 20-second function monitoring (AÜA-S20)

| Types | | Transmission procedure |
|---|---|---|
| **EN 50131** | **SES** | |
| Class 1 | AÜA-B25 | Demand-driven connection with 25-hourly function monitoring and voice annunciation |
| Class 2 | | Demand-driven connection with 25-hourly function monitoring and simple digital transmission |
| Class 3 | | Demand-driven connection with 25-hourly function monitoring and digital transmission |
| Class 4 | AÜA-B5 | Demand-driven connection with 5-hourly function monitoring and digital transmission |
| Class 5 | AÜA-S180 | Existing connection with 180-second function monitoring and digital transmission |
| Class 6 | AÜA-S20 | Existing connection with 20-second function monitoring and digital transmission |

**Table 9.6:** Communicator types

## 9.4 Alarm reporting

ICP-MAP5000-COM | ICP-MAP5000-COM/3 and ICP-MAP5000-SC | ICP-MAP5000-SC/3 have an integrated alarm reporting functionality.
It can be used for alarm transmission systems according to EN50136-2 SP4 or DP3. For DP3 compliant transmission, the alternate transmission path has to be wireless.
In case of a fault on the primary connection to a receiver, ICP-MAP5000-COM | ICP-MAP5000-COM/3 and ICP-MAP5000-SC | ICP-MAP5000-SC/3 are connecting to a backup receiver using the alternate transmission path.
The fault on the primary path is reported to the backup receiver and displayed on the touch keypad.
ICP-MAP5000-COM | ICP-MAP5000-COM/3 and ICP-MAP5000-SC | ICP-MAP5000-SC/3 can report to any alarm receiver supporting the following protocols:

– VdS 2465-S2
– SIA DC-09 (TCP/IP and UDP/IP)
– Conettix IP

Transmission path faults are directly reported to the user via the MAP5000 touch keypad.
ICP-MAP5000-COM | ICP-MAP5000-COM/3 and ICP-MAP5000-SC | ICP-MAP5000-SC/3 have implemented layer 1 supervision for Ethernet and wireless path.
ICP-MAP5000-COM | ICP-MAP5000-COM/3 and ICP-MAP5000-SC | ICP-MAP5000-SC/3 supervise the link to Ethernet and poll the wireless network on checking for connection, signal strength and sign in status.

The communicator in ICP-MAP5000-COM | ICP-MAP5000-COM/3 and ICP-MAP5000-SC | ICP-MAP5000-SC/3 is realized as a pass-through system.
The monitoring center, to which the MAP5000 panel is connected to, has to provide proof of availability of the alarm transmission system.
For information security purposes, ICP-MAP5000-COM | ICP-MAP5000-COM/3 and ICP-MAP5000-SC | ICP-MAP5000-SC/3 provide the possibility of encrypted transmission (AES 128, 192, 256).
To grant anti-substitution security, the initial key has to be provided manually by typing it into the configuration software RPS for MAP.

## 9.5 History log

The history log of the MAP5000 panels can be configured for 500 to 5000 entries using **RPS for MAP**.
For the SPT functionality, an additional history log of 1000 entries is available.
Both history logs are independent from each other and cannot influence each other.
In both history logs, the logged mandatory events cannot be deleted or overwritten by any logged optional events.
For both history logs there is no duration defined. This means, that events are stored for an unlimited amount of time and are not affected in case of power loss at the MAP5000 panel.

**Bosch Sicherheitssysteme GmbH**
Robert-Bosch-Platz 1
70839 Gerlingen
Germany
**www.boschsecurity.com**
© Bosch Sicherheitssysteme GmbH, 2025

**Building solutions for a better life**

202504041355