HIKVISION

Fingerprint Access Control Terminal

Quick Start Guide

UD17820B

1 Appearance

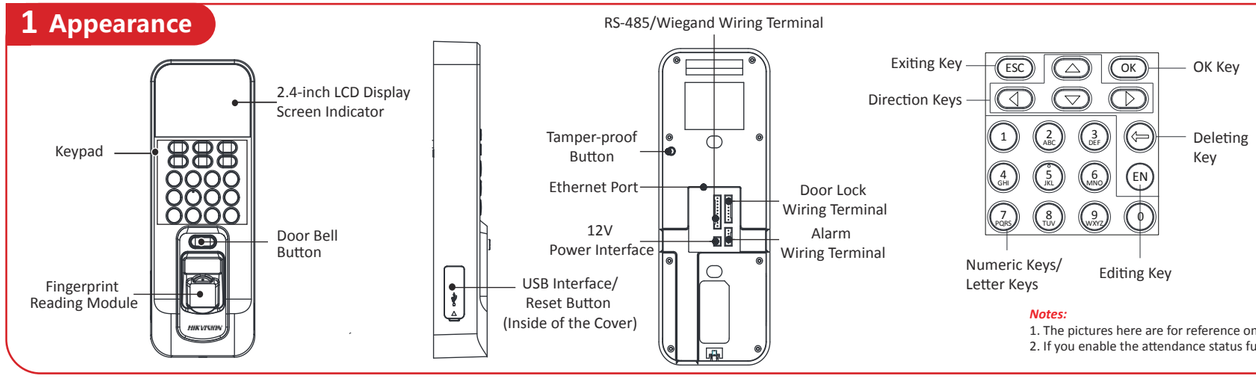

Keypad Descriptions

OK Key: Press to confirm operations. Press and hold the key for 3s to login the main interface.

Deleting Key:
1.Press to delete the letters or numbers one by one;
2.Long-press to clear all contents in the textbox;

Exiting Key: Press the button to exit the menu.

Direction Keys: Use △, ▽, ◁ and ▷ to move the cursor.

Numeric Keys/Letter Keys: Input numbers or letters.

Editing Key: Press to enter the editing status. Shift among numbers/lowercases, numbers/uppercases and symbols.

Notes:
1. The pictures here are for reference only. Some models do not support card swiping function. For details, refer to the actual products.
2. If you enable the attendance status function, the OK key, the direction key, and the exiting key can be the shortcut key of the attendance status.

2 Installation

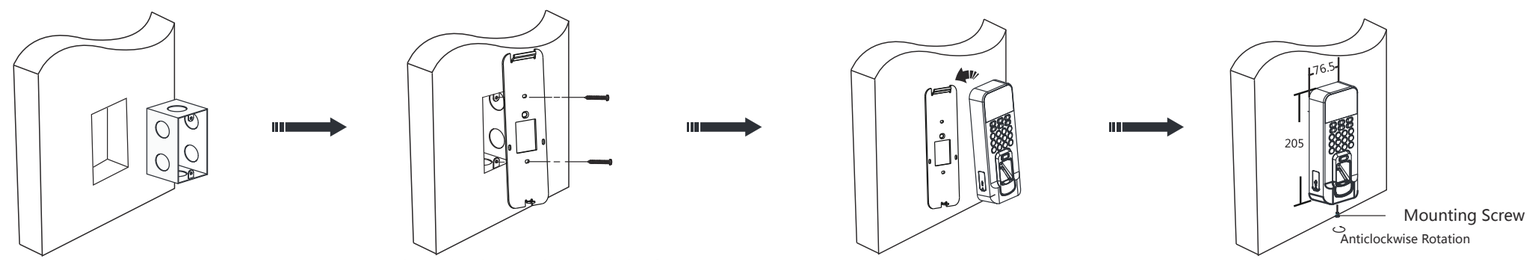

1. Install gang box into the wall.

2. Route the cables through the cable hole of the mounting plate.
3. Secure the device mounting plate on the gang box with two screws. (Supplied).

4. Connect the corresponding cables.
5. Align the terminal with mounting plate. Push the terminal in the mounting plate from bottom up. Fasten the terminal with the buckles on the plate.

6. Tighten the screws to fix the terminal on the mounting plate and complete the installation.

3 Activation

● Activating via Device

Power on and wire the network cable after installation.
You should activate the device before the first login.
After powering on, the interface will be displayed as follows.
You can create the device password and confirm the password to activate.

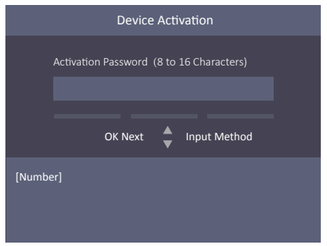

The default values of the terminal are as follows:
- The default IP address: 192.0.0.64
- The default port No.: 8000
- The default user name: admin

● Activating via SADP

1. Download SADP Software. Install and run the software.
2. Activate Device: Check the inactive device from the device list. Create a password on the right side of the interface and confirm the password.
3. Edit Device IP Address: Check the device and manually edit the device IP address, Port No., Subnet Mask, Gateway, etc.

● Activating via Client Software

1. Get the client software from the supplied disk or the official website. Install and run the client software.
2. Enter the Device Management page.
3. Click Device tab on the top of the right panel.
4. Click Online Device to show the online device area at the bottom of the page.
   The searched online devices are displayed in the list.
5. Check the device status (shown on Security Level column) and select an inactive device.
6. Click Activate to open the Activation dialog.
7. Create a password in the password field, and confirm the password.
8. Click OK to activate the device.
9. Select an activated device in Online Device area, click ⊕ on the Operation column to open the Modify Network Parameter window.
Change the device IP address to the same subnet with your computer if you need to add the

⚠

STRONG PASSWORD RECOMMENDED
We highly recommend you create a strong password of your own choosing (using a minimum of 8 characters, including upper case letters, lower case letters, numbers, and special characters) in order to increase the security of your product. And we recommend you reset your password regularly, especially in the high security system, resetting the password monthly or weekly can better protect your product.

©2020 Hangzhou Hikvision Digital Technology Co., Ltd.
It includes instructions on how to use the Product. The software embodied in the Product is governed by the user license agreement covering that Product.
About this Manual
This Manual is subject to domestic and international copyright protection. Hangzhou Hikvision Digital Technology Co., Ltd. ("Hikvision") reserves all rights to this manual. This manual cannot be reproduced, changed, translated, or distributed, partially or wholly, by any means, without the prior written permission of Hikvision.
Trademarks
HIKVISION and other Hikvision marks are the property of Hikvision and are registered trademarks or the subject of applications for the same by Hikvision and/or its affiliates. Other trademarks mentioned in this manual are the properties of their respective owners. No right of license is given to use such trademarks without express permission.
Legal Disclaimer
TO THE MAXIMUM EXTENT PERMITTED BY APPLICABLE LAW, THE PRODUCT DESCRIBED, WITH ITS HARDWARE, SOFTWARE AND FIRMWARE, IS PROVIDED "AS IS", WITH ALL FAULTS AND ERRORS, AND HIKVISION MAKES NO WARRANTIES, EXPRESS OR IMPLIED, INCLUDING WITHOUT LIMITATION, MERCHANTABILITY, SATISFACTORY QUALITY, FITNESS FOR A PARTICULAR PURPOSE, AND NON-INFRINGEMENT OF THIRD PARTY. IN NO EVENT WILL HIKVISION, ITS DIRECTORS, OFFICERS, EMPLOYEES, OR AGENTS BE LIABLE TO YOU FOR ANY SPECIAL, CONSEQUENTIAL, INCIDENTAL, OR INDIRECT DAMAGES, INCLUDING, AMONG OTHERS, DAMAGES FOR LOSS OF BUSINESS PROFITS, BUSINESS INTERRUPTION, OR LOSS OF DATA OR DOCUMENTATION, IN CONNECTION WITH THE USE OF THIS PRODUCT, EVEN IF HIKVISION HAS BEEN ADVISED OF THE POSSIBILITY OF SUCH DAMAGES.
REGARDING TO THE PRODUCT WITH INTERNET ACCESS, THE USE OF PRODUCT SHALL BE WHOLLY AT YOUR OWN RISKS. HIKVISION SHALL NOT TAKE ANY RESPONSIBILITIES FOR ABNORMAL OPERATION, PRIVACY LEAKAGE OR OTHER DAMAGES RESULTING FROM CYBER ATTACK, HACKER ATTACK, VIRUS INSPECTION, OR OTHER INTERNET SECURITY RISKS; HOWEVER, HIKVISION WILL PROVIDE TIMELY TECHNICAL SUPPORT IF REQUIRED.
SURVEILLANCE LAWS VARY BY JURISDICTION. PLEASE CHECK ALL RELEVANT LAWS IN YOUR JURISDICTION BEFORE USING THIS PRODUCT IN ORDER TO ENSURE THAT YOUR USE CONFORMS THE APPLICABLE LAW. HIKVISION SHALL NOT BE LIABLE IN THE EVENT THAT THIS PRODUCT IS USED WITH ILLEGITIMATE PURPOSES.
IN THE EVENT OF ANY CONFLICTS BETWEEN THIS MANUAL AND THE APPLICABLE LAW, THE LATER PREVAILS.
Data Protection
During the use of device, personal data will be collected, stored and processed. To protect data, the development of Hikvision devices incorporates privacy by design principles. For example, for device with facial recognition features, biometrics data is stored in your device with encryption method; for fingerprint device, only fingerprint template will be saved, which is impossible to reconstruct a fingerprint image.
As data controller, you are advised to collect, store, process and transfer data in accordance with the applicable data protection laws and regulations, including without limitation, conducting security controls to safeguard personal data, such as, implementing reasonable administrative and physical security controls, conduct periodic reviews and assessments of the effectiveness of your security controls.

4 Device Wiring

● External Device Wiring Overview (Without Secure Door Control Unit)

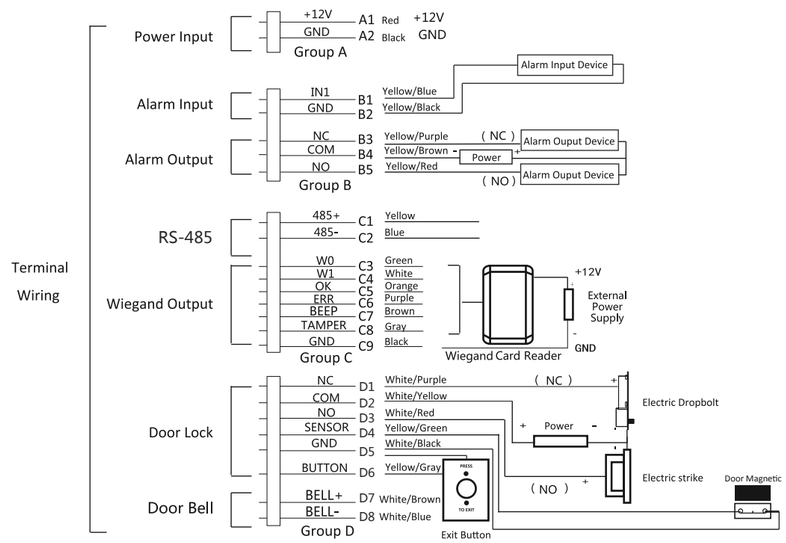

Note: The external power supply and the access control terminal should use the same GND cable.

● External Device Wiring Overview (With Secure Door Control Unit)

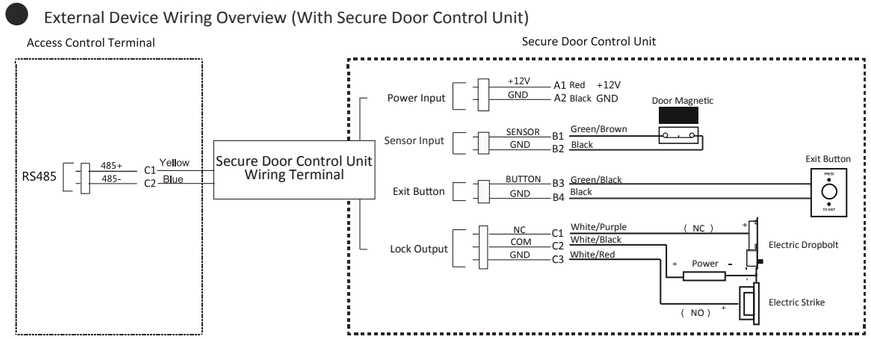

Note: The external power supply and the secure door control terminal should use the same GND cable.

5 Configuration

User Management, Access Control System Configuration and Attendance Configuration are three main parts of the Access Control Terminal.

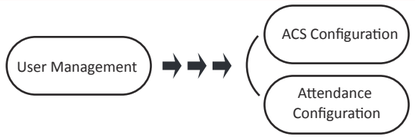

① User Management

Manage User: In the New (New User) interface, enter the new user ID No., the user name, the card No. Register the fingerprint, set the password, select the department, set the user permission, select schedule template, set the authentication mode and set the duress card. Save the parameters to confirm adding.

② Access Control System Configuration

ACS System Configuration:
In the ACS Parameters Setting interface, configure the terminal authentication mode, the sub reader authentication mode, the door magnetic status, the lock action time, the door-open timeout alarm, and the maximum times for authentication.

Holiday Group Configuration:
In New (New Holiday Group) interface, enter a new holiday group name. Select New ACS Holiday and enter the holiday No., the holiday name, the holiday start time and the holiday end time. Save the parameters to confirm adding.

Week Plan Configuration:
In the Week Plan menu, select New (New Week Plan) to configure the week plan parameters, including the No., the name, the week plan time and the corresponding periods. Save the parameters to confirm adding.

Schedule Template Configuration:
In the Schedule Template menu, select New (New Schedule Template) to configure the schedule template parameters, including the template No., the template name, the week plan and the holiday group. Save the parameters to confirm adding.

③ Attendance Configuration

Configure the shift via the device. You are able to schedule shift by department or by individual depending on the user property. The working flows are as follows:

Scheduling Shift by Department: Add User (See Step 1) - Edit Department - Configure Shift - Add Holiday - Configure Shift Schedule (by Department).

Scheduling Shift by Individual: Add User (See Step 1) - Configure Shift - Add Holiday - Configure Shift Schedule (by Individual).

► **Edit Department:** Select a department to edit in the department list. Select “Edit”and edit the department name, shift type and shift name. Save the parameters to confirm editing.

► **Configure Shift**
Normal Shift: In the Normal Shift interface, configure the attendance rule, the normal shift attendance. Save the parameters to confirm setting.
Man-Hour Shift: In the Man-Hour Shift interface, configure the man-hour shift parameters. Save the parameters to confirm setting.

► **Add Holiday**
In the New (New Holiday) interface, enter the holiday No, the holiday name, the holiday start time and the holiday end time. Save the parameters to confirm adding.

► **Configure Shift Schedule**
Schedule Shift by Department: Select a department to configure in the By Dept. (Schedule by Department) interface. Configure the shift, the start date, the end date and the holiday. Save the parameters to confirm configuration.
Schedule Shift by Individual: Select New Individual Shift in the By Indiv. (Schedule by Individual) interface. Select a person to schedule in the New Individual Shift interface. Configure the shift, the schedule start date and the end date. Save the parameters to confirm editing.

► **Attendance Report**
Plug the USB disk in the device. In Report interface of Attendance interface, select a table type to export. Press the OK key to export the attendance report to the USB disk.

The device will automatically check the USB disk memory. If there is no enough space for exporting, a prompt will be displayed. You are able to configure the record over threshold prompt and record delete function in the System interface.

Record over Threshold Pop up Prompt (%): If the attendance record memory reaches the configured value, the system will pop up a prompt to remind you. If configure the threshold to 99%, the system will pop up a prompt to remind you to delete the attendance data when the capacity reaches the threshold. The available value: 1 to 99.

Record Delete: When the function is enabled, the terminal will delete the first 3000 attendance records when the memory is full, in order to save the new attendance records. By default, the function is enabled. See Section 5.2 Attendance Record Delete Rule in the User Manual of Fingerprint Time Attendance Terminal.

► **View License:**
You can view the device License via the website: *http://opensource.hikvision.com/Home/List?id=46*

Regulatory Information

FCC Information
Please take attention that changes or modification not expressly approved by the party responsible for compliance could void the user’s authority to operate the equipment.
FCC compliance: This equipment has been tested and found to comply with the limits for a Class B digital device, pursuant to part 15 of the FCC Rules. These limits are designed to provide reasonable protection against harmful interference in a residential installation. This equipment generates, uses and can radiate radio frequency energy and, if not installed and used in accordance with the instructions, may cause harmful interference to radio communications. However, there is no guarantee that interference will not occur in a particular installation. If this equipment does cause harmful interference to radio or television reception, which can be determined by turning the equipment off and on, the user is encouraged to correct the interference by one or more of the following measures:
—Reorient or relocate the receiving antenna.
—Increase the separation between the equipment and receiver.
—Connect the equipment into an outlet on a circuit different from that to which the receiver is connected.
—Consult the dealer or an experienced radio/TV technician for help.
This equipment should be installed and operated with a minimum distance 20cm between the radiator and your body.
FCC Conditions
This device complies with part 15 of the FCC Rules. Operation is subject to the following two conditions:
1. This device may not cause harmful interference.
2. This device must accept any interference received, including interference that may cause undesired operation.
EU Conformity Statement

This product and - if applicable - the supplied accessories too are marked with "CE" and comply therefore with the applicable harmonized European standards listed under the RE Directive 2014/53/EU, the EMC Directive 2014/30/EU, the RoHS Directive 2011/65/EU.

2006/66/EC (battery directive): This product contains a battery that cannot be disposed of as unsorted municipal waste in the European Union. See the product documentation for specific battery information. The battery is marked with this symbol, which may include lettering to indicate cadmium (Cd), lead (Pb), or mercury (Hg). For proper recycling, return the battery to your supplier or to a designated collection point. For more information see: *www.recyclethis.info*

2012/19/EU (WEEE directive): Products marked with this symbol cannot be disposed of as unsorted municipal waste in the European Union. For proper recycling, return this product to your local supplier upon the purchase of equivalent new equipment, or dispose of it at designated collection points. For more information see: *www.recyclethis.info*

Industry Canada ICES-003 Compliance
This device meets the CAN ICES-3 (B)/NMB-3(B) standards requirements.
This device complies with Industry Canada licence-exempt RSS standard(s). Operation is subject to the following two conditions:
(1) this device may not cause interference, and
(2) this device must accept any interference, including interference that may cause undesired operation of the device.
Le présent appareil est conforme aux CNR d'Industrie Canada applicables aux appareils radioexempts de licence. L'exploitation est autorisée aux deux conditions suivantes :
(1) l'appareil ne doit pas produire de brouillage, et
(2) l'utilisateur de l'appareil doit accepter tout brouillage radioélectrique subi, même si le brouillage est susceptible d'en compromettre le fonctionnement.
Under Industry Canada regulations, this radio transmitter may only operate using an antenna of a type and maximum (or lesser) gain approved for the transmitter by Industry Canada. To reduce potential radio interference to other users, the antenna type and its gain should be so chosen that the equivalent isotropically radiated power (e.i.r.p.) is not more than that necessary for successful communication.
Conformément à la réglementation d'Industrie Canada, le présent émetteur radio peut
fonctionner avec une antenne d'un type et d'un gain maximal (ou inférieur) approuvé pour l'émetteur par Industrie Canada. Dans le but de réduire les risques de brouillage radioélectrique à l'intention des autres utilisateurs, il faut choisir le type d'antenne et son gain de sorte que la puissance isotrope rayonnée équivalente (p.i.r.e.) ne dépasse pas l'intensité nécessaire à l'établissement d'une communication satisfaisante.
This equipment should be installed and operated with a minimum distance 20cm between the radiator and your body.
Cet équipement doit être installé et utilisé à une distance minimale de 20 cm entre le radiateur et votre corps.

Use only power supplies listed in the user instructions:

Model	Manufacturer	Standard
DSA-12PFT-12FUK 120100	Dee Van Enterprise Co., Ltd.	BS
DSA-12PFT-12FAU 120100	Dee Van Enterprise Co., Ltd.	AS
DSA-12PFT-12FIN 120100	Dee Van Enterprise Co., Ltd.	IS
DSA-12PFT-12FUS 120100	Dee Van Enterprise Co., Ltd.	IEC
DSA-12PFT-12 FBZ 120100	Dee Van Enterprise Co., Ltd.	NBR

Scan the QR code to get the user manual for detailed information.
Note that mobile data charges may apply if Wi-Fi is unavailable.