10" Bedside Terminal

Quick Start Guide

UD43290B-B

Quick Start Process Guide

1 Wiring

Check the wiring diagram.

↓

2 Installation

Install the device and handle.

↓

3 Quick Setup

3.1 Activate the device locally.

3.2 Quick setup.

Appearance

Bedside Terminal

- Debug serial port for debugging purposes only.
- The pictures in this manual are for illustration purposes only. Please refer to the actual product for details.

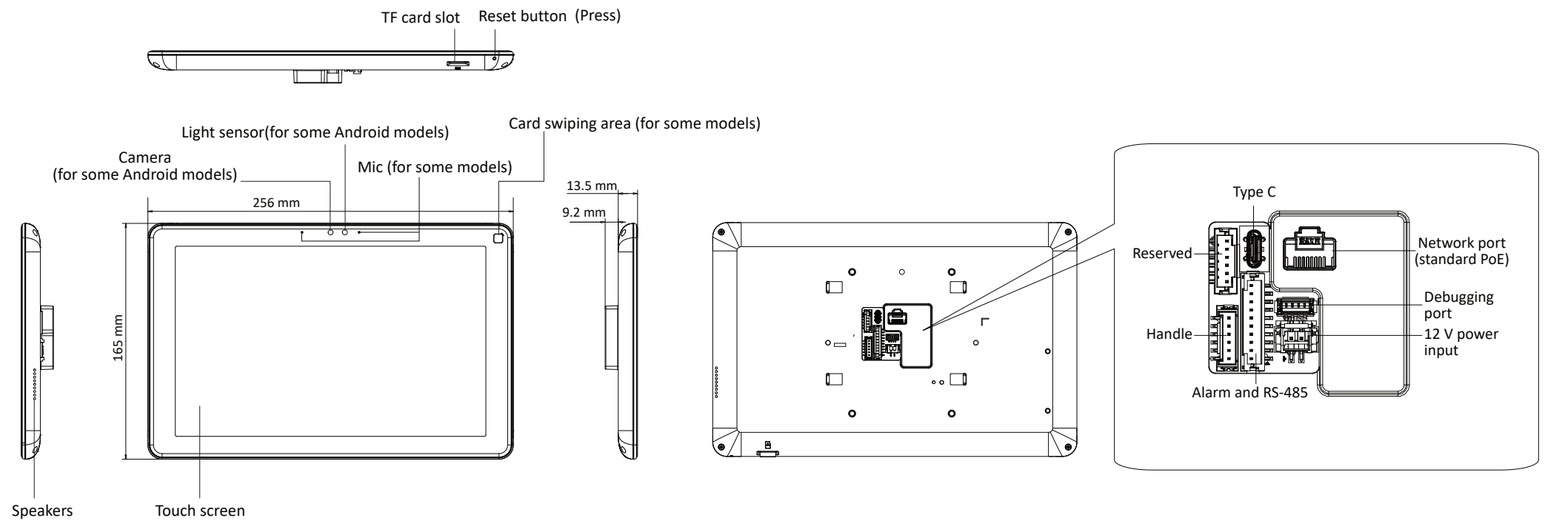

About this Document

● This Document includes instructions for using and managing the Product. Pictures, charts, images and all other information hereinafter are for description and explanation only.
● The information contained in the Document is subject to change, without notice, due to firmware updates or other reasons. Please find the latest version of the Document at the Hikvision website (***https://www.hikvision.com***). Unless otherwise agreed, Hangzhou Hikvision Digital Technology Co., Ltd. or its affiliates (hereinafter referred to as "Hikvision") makes no warranties, express or implied.
● Please use the Document with the guidance and assistance of professionals trained in supporting the Product.

About this Product

This product can only enjoy the after-sales service support in the country or region where the purchase is made.

Acknowledgment of Intellectual Property Rights

● Hikvision owns the copyrights and/or patents related to the technology embodied in the Products described in this Document, which may include licenses obtained from third parties.
● Any part of the Document, including text, pictures, graphics, etc., belongs to Hikvision. No part of this Document may be excerpted, copied, translated, or modified in whole or in part by any means without written permission.
● HIKVISION and other Hikvision's trademarks and logos are the properties of Hikvision in various jurisdictions.
● Other trademarks and logos mentioned are the properties of their respective owners.

LEGAL DISCLAIMER

● TO THE MAXIMUM EXTENT PERMITTED BY APPLICABLE LAW, THIS DOCUMENT AND THE PRODUCT DESCRIBED, WITH ITS HARDWARE, SOFTWARE AND FIRMWARE, ARE PROVIDED "AS IS" AND "WITH ALL FAULTS AND ERRORS". HIKVISION MAKES NO WARRANTIES, EXPRESS OR IMPLIED, INCLUDING WITHOUT LIMITATION, MERCHANTABILITY, SATISFACTORY QUALITY, OR FITNESS FOR A PARTICULAR PURPOSE. THE USE OF THE PRODUCT BY YOU IS AT YOUR OWN RISK. IN NO EVENT WILL HIKVISION BE LIABLE TO YOU FOR ANY SPECIAL, CONSEQUENTIAL, INCIDENTAL, OR INDIRECT DAMAGES, INCLUDING, AMONG OTHERS, DAMAGES FOR LOSS OF BUSINESS PROFITS, BUSINESS INTERRUPTION, OR LOSS OF DATA, CORRUPTION OF SYSTEMS, OR LOSS OF DOCUMENTATION, WHETHER BASED ON BREACH OF CONTRACT, TORT (INCLUDING NEGLIGENCE), PRODUCT LIABILITY, OR OTHERWISE, IN CONNECTION WITH THE USE OF THE PRODUCT, EVEN IF HIKVISION HAS BEEN ADVISED OF THE POSSIBILITY OF SUCH DAMAGES OR LOSS.
● YOU ACKNOWLEDGE THAT THE NATURE OF THE INTERNET PROVIDES FOR INHERENT SECURITY RISKS, AND HIKVISION SHALL NOT TAKE ANY RESPONSIBILITIES FOR ABNORMAL OPERATION, PRIVACY LEAKAGE OR OTHER DAMAGES RESULTING FROM CYBER-ATTACK, HACKER ATTACK, VIRUS INFECTION, OR OTHER INTERNET SECURITY RISKS; HOWEVER, HIKVISION WILL PROVIDE TIMELY TECHNICAL SUPPORT IF REQUIRED.
● YOU AGREE TO USE THIS PRODUCT IN COMPLIANCE WITH ALL APPLICABLE LAWS, AND YOU ARE SOLELY RESPONSIBLE FOR ENSURING THAT YOUR USE CONFORMS TO THE APPLICABLE LAW. ESPECIALLY, YOU ARE RESPONSIBLE, FOR USING THIS PRODUCT IN A MANNER THAT DOES NOT INFRINGE ON THE RIGHTS OF THIRD PARTIES, INCLUDING WITHOUT LIMITATION, RIGHTS OF PUBLICITY, INTELLECTUAL PROPERTY RIGHTS, OR DATA PROTECTION AND OTHER PRIVACY RIGHTS. YOU SHALL NOT USE THIS PRODUCT FOR ANY PROHIBITED END-USES, INCLUDING THE DEVELOPMENT OR PRODUCTION OF WEAPONS OF MASS DESTRUCTION, THE DEVELOPMENT OR PRODUCTION OF CHEMICAL OR BIOLOGICAL WEAPONS, ANY ACTIVITIES IN THE CONTEXT RELATED TO ANY NUCLEAR EXPLOSIVE OR UNSAFE NUCLEAR FUEL-CYCLE, OR IN SUPPORT OF HUMAN RIGHTS ABUSES.
● IN THE EVENT OF ANY CONFLICTS BETWEEN THIS DOCUMENT AND THE APPLICABLE LAW, THE LATTER PREVAILS.

© Hangzhou Hikvision Digital Technology Co., Ltd. All rights reserved.

1 Wiring

Alarm and RS-485 Port

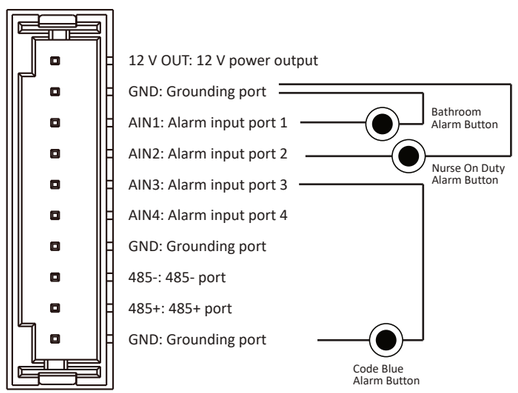

Wiring diagram of alarm button

Alarm and RS-485 Port

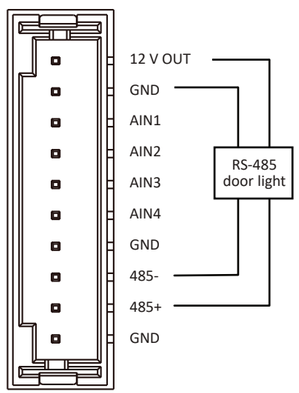

Wiring diagram of door light

Introduction to door light

- The green light remains on when a call originates or during a call, the red light remains on during alarms, and the yellow light remains on during dressing changes.
- Please connect the door light cable to the device before powering on the device. Otherwise, the device may restart.

Introduction to 12 V power output.

- The 12 V power output is available only when powered via PoE.
- This wiring diagram applies only to the PoE mode.

2 Installation

Mounting with the Gang Box

Before You Start

- Make sure all related equipments are power-off during the installation.
- Tools that you need to prepare for installation: Drill and gradienter.

The installation height must not exceed 2 m.

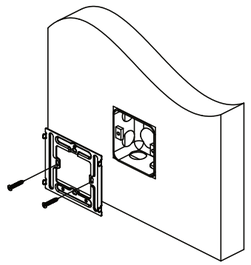

1. Use 2 pieces of SC-KA4X22 screws to securely fasten the bracket to the gang box.

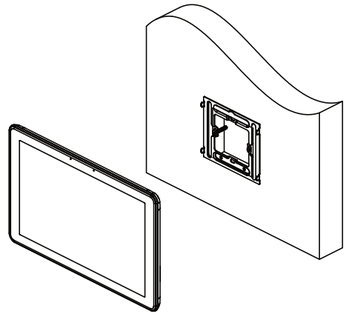

2. Carefully align the device with the mounting bracket clips and install it into place.

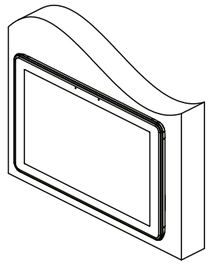

3. Finished. Ensure there are no loose parts or wobbling to confirm a proper installation.

Installing the Medical Handle

You can install the medical handle before or after installing the arm bracket.

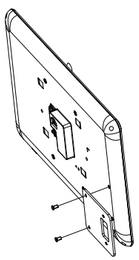

1. Align the screw hole of the handle support with the hole on the rear panel of the device, and secure it using two PM3×6 screws.

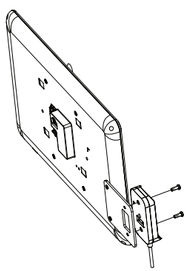

2. Secure the support and handle base using two PM3×6 screws.

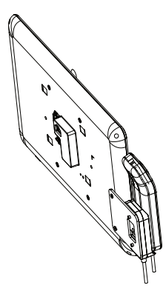

3. Magnetically mount the handle to the handle base and complete the installation.

Installing the Arm Bracket

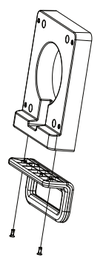

1. Secure the junction box to the handle using two PM3×10 screws.

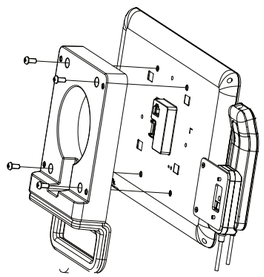

2. Route the reserved cable of the handle through the junction box and connect it to the corresponding port on the device.
Route the excess cable through the junction box and secure the junction box to the device using four PM4×8 screws.

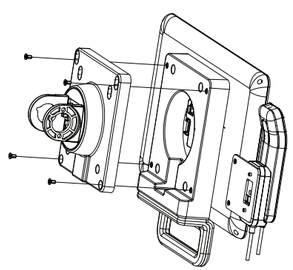

3. Route the reserved cable through the arm bracket, and secure the bracket to the junction box using four PM4×8 screws.

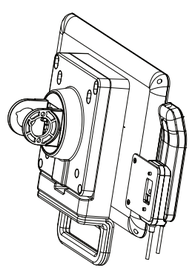

The installation is complete.

3 Activation and Quick Setup

You must activate the device when you use it for the first time.

Local Activation

1. After the device is powered on, the screen turns on and you will be automatically directed to the activation interface.
2. Create an activation password.
3. Tap "Next."

In order to improve security while using the product on the network, set a password between 8–16 characters in length, consisting of at least two kinds of the following characters: digits, lowercase and uppercase letters, and special characters.

Quick Setup

Upon activation, the device will automatically go to the Quick Setup interface.
Note before configuration: Connect the PC with a network cable and obtain the IP address of the network port through the PC.

1. Configure the mode and tap "Next."
   - Demo mode: This mode is for demo only. You do not need to configure the local IP address, server IP address, or device ID.
   - Normal mode: The device can function normally only when you configure the local IP address, server IP address, and device ID.
2. If you select the Normal mode, you must configure the local IP address. Enter the IP address, subnet mask, and gateway. Tap "Next."
3. If you select the Normal mode, you must configure the IP address and port number of the server, and tap "Next." The server IP address is the IP address of the server running the smart ward management platform. The default port number is 443.
4. Configure the device ID. On the "Application Settings" interface, select the department/ward, room ID, and bed ID. Tap "Configuration completed."

You must make this setting in the smart ward management platform. For more information, see User Manual.

Scan the QR Code to see the User Manual

Warning

- While installing and using this device, all electrical safety regulations of the country and region where the product is used must be strictly observed.
- To prevent possible hearing damage, do not listen to music at high volume for an extended period of time.

Instruction

Requirements for installation and maintenance personnel:
- Have basic knowledge and installation skills for access control systems and compositions.
- Have basic knowledge and operation skills for low voltage wiring and low voltage electric circuit wiring.
- Have basic knowledge and skills regarding basic network security and be able to read and understand the content of this manual.

Caution

- Do not place an exposed flame source, for example, a lit candle, on the device.
- Do not expose the device to dripping or splashing nor place items such as vases containing liquid on the top.
- Please install the device in strict accordance with the installation instructions set forth in the Quick Start Guide. For safety, the device must be securely mounted to the installation surface.
- The installation surface must be able to withstand a force three times the weight of the device exerted downward along the center of gravity of the device plus 50 N force in the horizontal direction after the device is installed. The device must be reliably installed, and the installation parts must not be deformed or broken.
- The debug serial port on the device is only used for debugging and is not intended for users.
- The DC output port on the device does not confirm to LPS requirements. The devices and cables connected downstream must meet fire rated enclosure requirements.
- Please use the adapter coming with the device, if any. If the device does not come with a built-in power supply, please ensure that the power adapter or other power source complies with LPS requirements. For the information on power output parameters, see the nameplate on the device.
- Caution! This device can only be used with supporting brackets. Using with others (such as carts, shelves, or handling devices) may lead to instability and personal injury.
- If you must connect cables of the device by yourself, select the cables according to the electrical parameters on the device nameplate, and use a standard wire stripper set to the correct setting based on the wire gauge to strip cables at an appropriate length. The cables are free of conductor insulation damage. Otherwise, serious consequences may be caused.
- Always cut off the power supply before wiring, installation, and removal operation.
- Do not throw items onto the device or violently vibrate the device. Keep the device away from magnetic field interference. Do not install the device in places where the installation surface vibrates or are prone to impact. Failure to do this may damage the device.
- Please do not use the device in high temperature, low temperature, or high humidity environments. For specific temperature and humidity requirements, refer to the parameter table.
- Do not expose the device to direct sunlight or place it in poorly ventilated areas or near heat sources such as heaters or heating source. Failure to do this may lead to a fire hazard.
- Do not clean the device with corrosive liquids (such as disinfectant or alcohol) or spray them directly onto the device. Otherwise, the device may be damaged or malfunctioning.
- Network security issues may arise when the device is connected to the internet. Please enhance your personal information and data security protection. When you discover potential network security risks, please contact us immediately.
- Please understand that you are responsible for the configurations, all passwords, and relevant security issues of the product. You are also responsible for keeping your user name and password safe.
- Keep all of the original packaging materials of the device safe, so that it can be used to re-package the device to be sent back to the distributor or manufacturer should any issues arise. The company assumes no responsibility for accidental damage caused by the use of non-original packaging materials during transportation.
- Biometric identification products may not be fully adapted to any anti-counterfeiting environment. Please combine authentication methods for high-security places.
- It should be noted that biometric identification may not be fully accurate due to the quality of the captured photo and the effect of ambient light.
- If the device emits smoke, odor, or noise, immediately disconnect the device from the power supply and promptly contact the dealer or service center.
- If the device is not working properly, contact the store where you purchased the device or the nearest service center. Do not disassemble or modify the device in any way. (The company will not assume responsibility for any issues that arise due to unauthorized modification or repair).